Fibre Frame Solutions

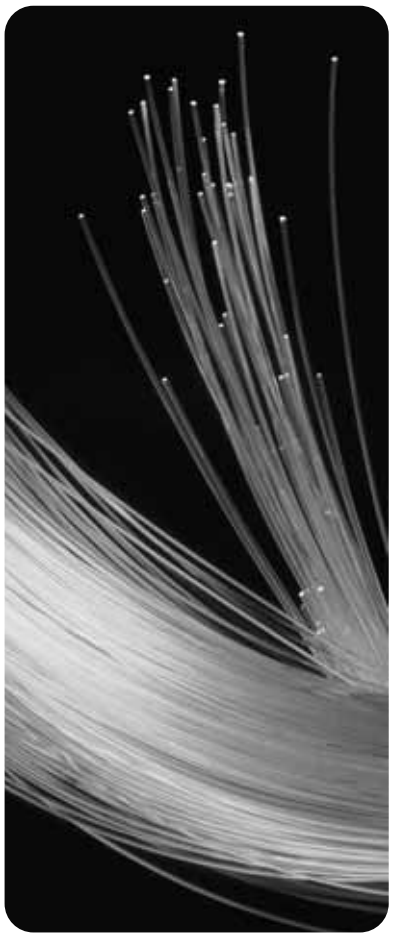

NG3™ High-Density Fibre Frames

Table of Contents

Fibre Distribution Frame

Table of Contents

Fibre Distribution Frame

Table of Contents

Frame Solutions

Frame Comparisons

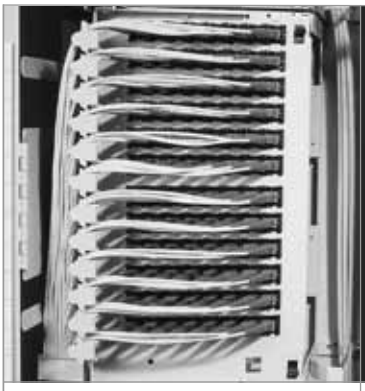

	FDF		NG3
	7"	8"	
Frame Termination Capacity (Standard/Small-Form-Factor)	648/1008	768/1152	1440/1440
Recommended Maximum Frames per Lineup	5	5	15
Frame Lineup Capacity	3700	3700	21,000
Frame Size (WxD)	660mm x 300mm	660mm x 300mm	760mm x 610mm
Frame Access	Front & rear	Front and rear	Front and rear
Connector Access	Angled Retainer	Angled Retainer	Sliding adaptor Pack
Recommended Applications	Small to medium fibre count Improved cable management		Medium to large fibre count applications for C-R -449 core issue 2 complience

6/07 • 6356_au • Fibre Connectivity Solutions

Frame Solutions

Frame Comparisons

		
OMX™ 600	**NEXT GENERATION FRAME** (NGF)	
432/864	1152/1728	**Frame Termination Capacity** (Standard/Small-Form-Factor)
3	20	**Recommended Maximum Frames per Lineup**
1296/2592	21,000	**Frame Lineup Capacity**
600mm x 300mm	600mm x 600mm	**Frame Size** (WxD)
Front only	Front and rear	**Frame Access**
Angled retainer	Sliding adapter pack	**Connector Access**
Small fibre count applications and applications in which restricted access is desired	Medium to large fibre count applications. Highest fibre count frame solution	**Recommended Applications**

Next Generation Frame System

Introduction

Frames

ADC KRONE'S Next Generation Frame product line has fibre frames designed to fit a variety of termination, splice, and storage applications. Each frame option is designed with an emphasis on superior cable management and ease of use, including features such as ample trough space for cable and jumpers, easy access to connectors, and storage for jumpers. The frame sections are shipped from the factory fully equipped with all cable management hardware including a built-in jumper storage panel.

Fibre Termination Blocks (FTB)

Fibre Termination Blocks (FTBs) are available with SC, FC, ST® and E2000 adapters in block configurations of 72 or 96-position. Also, 144-position FTBs are available using LX.5® and LC adapters. FTBs utilise sliding adapter packs to gain easy access to both the front and rear of connectors. There is also a block configuration available to accommodate Mini Value-Added Modules (Mini VAMs) for applications requiring splitters or WDMs. FTBs can be ordered with or without intrafacility (IFC) or outside plant cable.

Fibre Combination Blocks (FCB)

Fibre Combination Blocks (FCBs) provide termination and on-frame splicing capabilities, all in one block. The block occupies two mounting positions on the frame section. They are available with SC, FC, ST® and E2000 adapters in block configurations of 72 or 96-position.
Also, 144-position FCBs are available using LX.5® or LC adapters.

Features and Benefits

Ample Trough Space

- Reduces jumper pile-up and congestion
  - *Reduces maintenance time due to easy removal and tracing of jumpers*
  - *Minimises risk of microbends or damage to fibre*

Built-in Jumper Storage Panel

- Minimises number of required jumper lengths
- Maintains fibre bend radius
- Simplifies frame installation
  - *Saves money by reducing the number of different jumper lengths that have to be kept in inventory*
  - *Minimises risk of microbends or damage to fibre*

Sliding Adapter Packs

- Promotes high density
- Provides easy access to connectors
  - *Saves valuable floor space*
  - *Reduces time required for operations and maintenance*

Intelligent Cable Routing System

- No fibre cross-over points
- Multiple vertical troughways
  - *Reduces maintenance time due to easier removal and tracing of jumpers and minimises fibre "weaving"*

6/07 • 6356_au •

Next Generation Frame System

Fibre Main Distributing Frame

The Fibre Main Distributing Frame (FMDF) is the cornerstone of the NGF product line. This innovative frame has six rear horizontal troughs. This abundant trough space minimises fibre pile up and congestion leading to easier jumper traceability and removal. The frame has twelve Fibre Termination Block (FTB) mounting positions equally divided between vertical columns on the left and right sides of the frame as shown in the figure below. The frame is 600mm wide x 600mm deep. The built-in jumper storage panel will store up to 5 metres of jumper slack.

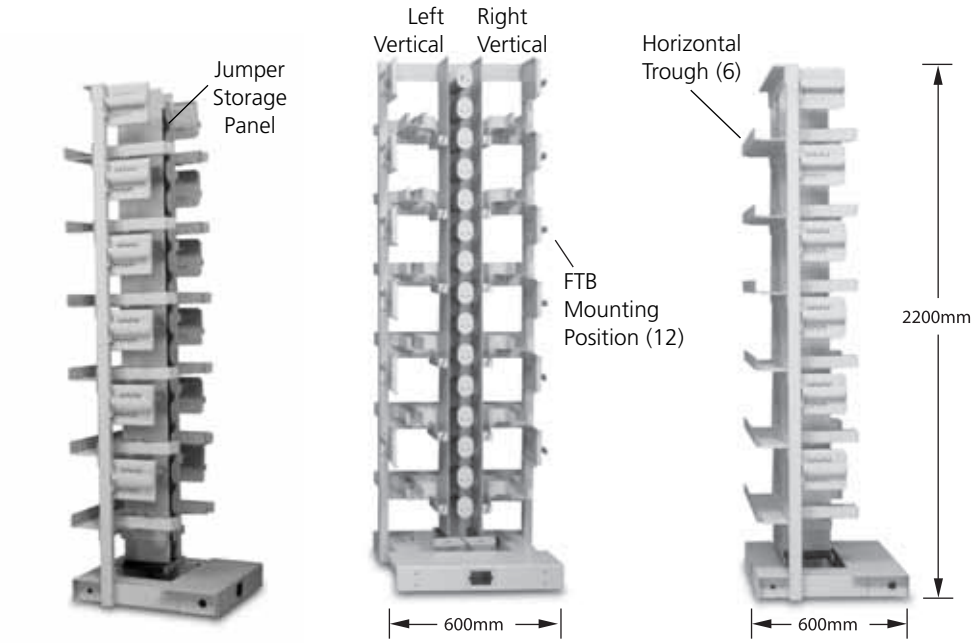

Front ISO View | Front View | Side View

Ordering Information

Description	Dimensions (HxWxD)	Catalogue Number
600mm Fibre Main Distributing Frame frame section (FMDF)	2200mm x 600mm x 600mm	NGF-ETSIMDF6060

Next Generation Frame System

Front Facing Fibre Main Distributing Frame

The Front Facing Fibre Main Distributing Frame (F3MDF) is designed for single-sided access applications and may be mounted up against a wall or back-to-back to save floor space. Unlike the FMDF, the more compact F3MDF is equipped with a single 230mm horizontal trough. The F3MDF has twelve Fibre Termination Block (FTB) mounting positions equally divided between vertical columns on the left and right sides of the frame as shown in the figure below. The frame is 600mm wide x 48mm deep. The built-in jumper storage panel will store up to 5 metres of jumper slack.

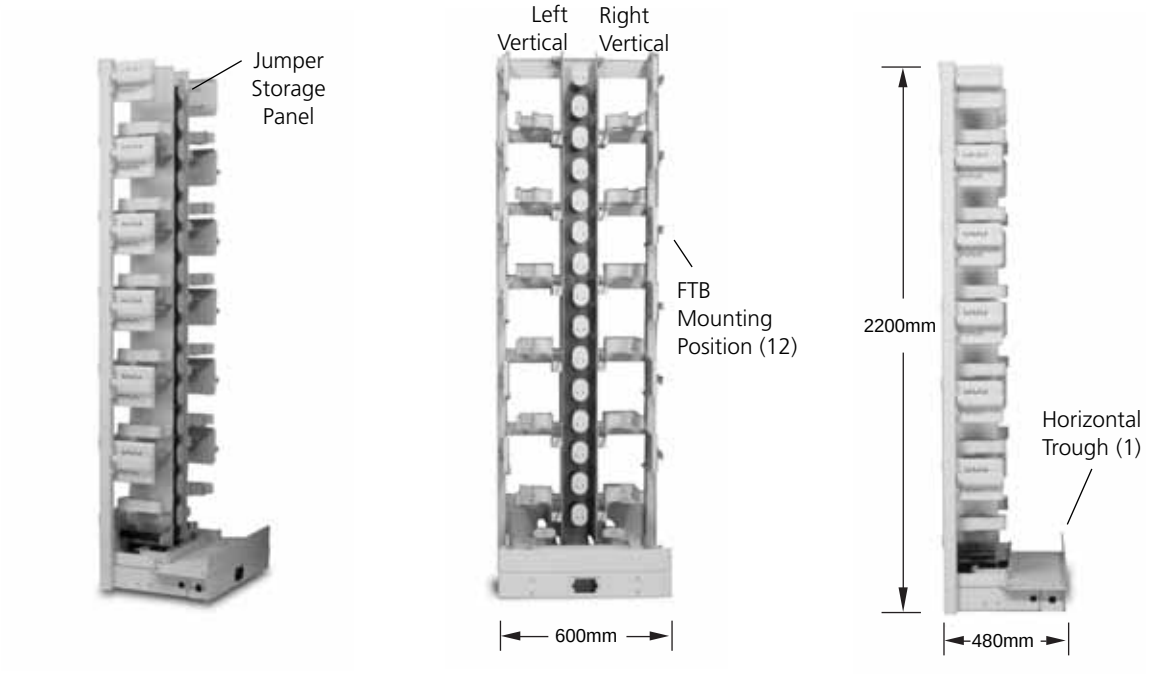

Front ISO View | Front View | Side View

Ordering Information

Description	Dimensions (HxWxD)	Catalogue Number
600mm Front Facing Fibre Main Distributing Frame (F3MDF) frame section	2200mm x 600mm x 480mm	NGF-ETSIF3MDF6048

6/07 • 6356_au •

Next Generation Frame System

Fibre Slim Rack

The Fibre Slim Rack is designed for lower density applications than the FMDF or F3MDF. It has six Fibre Termination Block (FTB) mounting positions and is designed for single-sided access applications. The Slim Rack is intended for use in a single frame application and should not be used in a multiframe lineup. The built-in jumper storage panel will store up to 5 metres of jumper slack.

When ordering fibre termination blocks for the Slim Rack, remember that only left oriented blocks are used on this frame.

Front ISO View

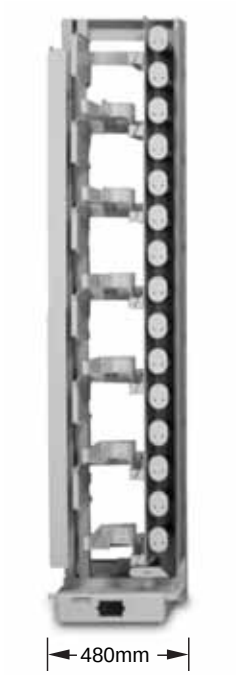

Front View

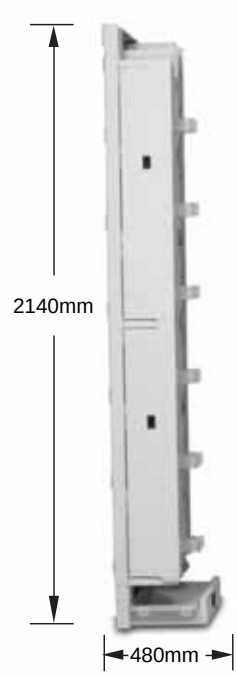

Side View

Ordering Information

Description	Dimensions (HxWxD)	Catalogue Number
NGF Fibre Slim Rack frame section	2140mm x 480mm x 480mm	NGF-SLM7A100

Next Generation Frame System

Unterminated Fibre Termination Blocks

Fibre Termination Blocks (FTBs) without fibre can be ordered fully loaded with adapters or empty (no adapters), in which case the adapter packs for the block must be ordered separately (see page 3.14). Before ordering, determine the block orientation and cable exit direction. Unterminated FTBs may be ordered with a "left" orientation (mounts on the left side of the frame) or a "right" orientation (mounts on the right side of the frame). The cable exit direction will be either "upward" (cables terminated to the rear side of the block exit up toward the top of the frame) or "downward" (cables terminated to the rear side of the block exit down toward the bottom of the frame). All blocks with adapters only are configured to terminate single or dual jumpers on the rear of the block. If a multifibre breakout style cable (i.e., OSP/intrafacility cable) is to be terminated to the rear of the block, a separate clamping kit is required (see page 37).

Catalogue Number

NGF-TB

Block Style

1	1	SC
	2	FC/ST®
	3	E2000
	4	LX.5®/LC

Block Orientation

3	L	Left
	R	Right

Cable Exit Direction

4	U	Upward
	D	Downward

Block Configuration

2	B	72
	C	96
	M	144 (LX.5® or LC only)*

* 144 blocks using style 1, 2, or 3 **cannot** be used in 600mm wide NGF frames

Adapter Type Singlemode

5	7	SC UPC
	8	SC UPC, zirconia sleeve
	L	SC 8° APC
	L9	SC 9° APC
	V	E2000 8° APC
	2	FC UPC
	3	FC 8° APC
	4	ST® UPC
	N	LX.5® UPC (144 only)
	X	LX.5® APC (144 only)
	K	LC UPC (144 only)
	S	LC APC (144 only)

OR

Adapter Type (62.5/125) Multimode

9	SC
A	FC
5	ST®
Y	LX.5® (144 only)
P	LC (144 only)

Definition of Variables	
1	**Block Style** General adapter type required in the FTB
2	**Block Configuration** Maximum number of terminations that the FTB will accommodate when fully loaded
3	**Block Orientation** Vertical column of the frame the FTB is to be mounted on
4	**Cable Exit Direction** Direction the equipment jumpers or OSP cable will exit from the FTB
5	**Adapter Type** Specific adapter type required in the FTB

Cable Clamping Kit

Clamping kit includes: Cable clamp, protective cover and fanout bracket. It is required when terminating a multifibre breakout style cable to the rear of the block.

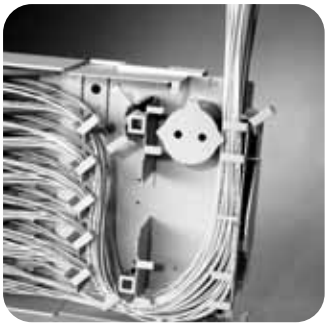

72-position block loaded with jumpers

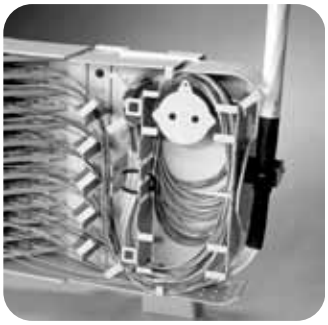

72-position block loaded with multifibre breakout cable

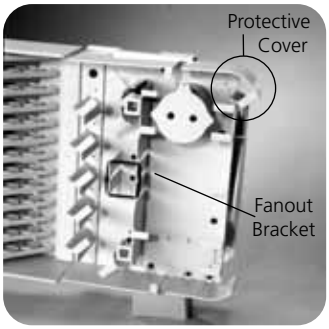

72-position block with clamping kit

Ordering Information

Description	Catalogue Number
Block style originally purchased	
All 72-position blocks	NGF-ACCOSPKIT02
96 or 144-position **Left Up** blocks	NGF-ACCRCMSLU
96 or 144-position **Right Up** blocks	NGF-ACCRCMSRU
96 or 144-position **Left Down** blocks	NGF-ACCRCMSLD
96 or 144-position **Right Down** blocks	NGF-ACCRCMSRD

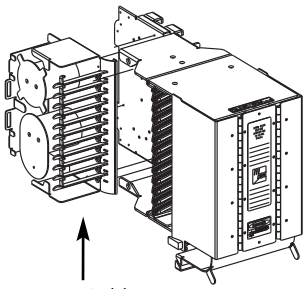

Rear Cable Management Tray for 144 Block Conversion Kit

Next Generation Frame System

Preterminated Fibre Termination Blocks

Preterminated Fibre Termination Blocks (FTBs) are available with either indoor or outdoor rated cable in ribbon or stranded configurations. All blocks are 100% factory tested to guarantee continuity and reliable connections. Preterminated FTBs make installation quick and easy, reducing labour costs. Before ordering, determine the block orientation and cable exit direction. Preterminated FTBs may be ordered with a "left" orientation (mounts on the left side of the frame) or a "right" orientation (mounts on the right side of the frame). The cable exit direction will be either "upward" (cables terminated to the rear side of the block exit up toward the top of the frame) or "downward" (cables terminated to the rear side of the block exit down toward the bottom of the frame).

Preterminated Fibre Termination Blocks arrive from the factory with either IFC or OSP Cables

Fibre cable easily uncoils during installation

Fibre Termination Block ships inside the drum

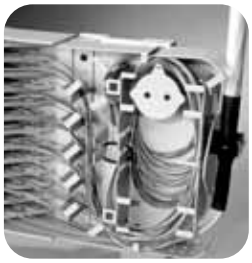

Fibre Termination Block loaded with multifibre breakout cable

Ordering information follows on next page.

Definition of Variables	
1	**Block Style** General adapter type required in the FTB
2	**Block Configuration** Maximum number of terminations that the FTB will accommodate when fully loaded
3	**Block Orientation** Vertical column of the frame the FTB is to be mounted on
4	**Cable Exit Direction** Direction the equipment jumpers or OSP cable will exit from the FTB
5	**Adapter/Connector #1** Specific adapter/connector type required in the FTB. Refers to the adapter/connector type at the FTB
	Connector #2 Specific connector type required at the cable end opposite the FTB
7	**Cable Type** Type of cable to be terminated to the FTB
8	**Cable Length** Required length of the cable terminated to the FTB

Next Generation Frame System

Preterminated Fibre Termination Blocks

Catalogue Number

NGF-TB

Block Style

1	1	SC
	2	FC/ST®
	3	E2000
	4	LX.5®/LC

Block Configuration

2	B	72
	C	96
	M	144 (LX.5® or LC only)[3]

Block Orientation

3	L	Left
	R	Right

Cable Exit Direction

4	U	Upward
	D	Downward

Adapter Type Singlemode

5	7	SC UPC
	8	SC UPC, zirconia sleeve
	L	SC 8° APC
	L9	SC 9° APC
	V	E2000 8° APC
	2	FC UPC
	3	FC 8° APC
	4	ST® UPC
	N	LX.5® UPC (144 only)
	X	LX.5® APC (144 only)
	K	LC UPC (144 only)
	S	LC APC (144 only)

OR

Adapter/Connector #1 Multimode (62.5/125)

9	SC
A	FC
5	ST®
Y	LX.5® (144 only)
P	LC (144 only)

Connector #2 Singlemode

6	0	No connector/stub end
	7	SC UPC
	8	SC UPC, zirconia sleeve
	L	SC 8° APC
	L9	SC 9° APC
	V	E2000 8° APC
	2	FC UPC
	3	FC 8° APC
	4	ST® UPC
	N	LX.5® UPC (144 only)
	X	LX.5® APC (144 only)
	K	LC UPC (144 only)
	S	LC APC (144 only)

OR

Connector #2 Multimode (62.5/125)

0	No connector/stub end
9	SC
A	FC
5	ST®
Y	LX.5® (144 only)
P	LC (144 only)

Cable Length

8	XXX	Length in metres

IFC Type Singlemode[1]

			Glass Type
7	ZB	72-fibre stranded	House Cable[2]
	ZC	96-fibre stranded	House Cable[2]
	ZD	144-fibre stranded	House Cable[2]
	AA	12-fibre stranded	Corning
	BA	24-fibre stranded	Corning
	CA	36-fibre stranded	Corning
	2A	48-fibre stranded	Corning
	VA	72-fibre stranded	Corning
	DA	96-fibre stranded	Corning
	FH	144-fibre stranded	Corning
	MX	72-fibre stranded, Maxi-Strip	Corning
	GF	96-fibre stranded, Maxi-Strip	Corning
	GA	12-fibre ribbon	Sumitomo
	HA	24-fibre ribbon	Sumitomo
	MA	36-fibre ribbon	Sumitomo
	JA	48-fibre ribbon	Sumitomo
	KA	72-fibre ribbon	Sumitomo
	EG	96-fibre ribbon	Sumitomo
	FJ	144-fibre ribbon	Sumitomo

OR

IFC Type Multimode (62.5/125)

		Glass Type
AM	12-fibre stranded	Corning
BM	24-fibre stranded	Corning
DM	36-fibre stranded	Corning
2M	48-fibre stranded	Corning
VM	72-fibre stranded	Corning
WM	96-fibre stranded	Corning
YM	144-fibre stranded	Corning

OR

OSP Cable Type Singlemode

		Glass Type
VT	72-fibre stranded dielectric	Pirelli
VW	96-fibre ribbon dielectric	Pirelli
EN	96-fibre stranded dielectric	Pirelli
FL	144-fibre stranded dielectric	Pirelli
FM	144-fibre ribbon dielectric	Pirelli

[1] Other cable types are available upon request. Please contact your ACD KRONE representative.

[2] House cable will use Corning SMF28, Sumitono, Alcatel or similar singlemode fibre based on current market availability.

[3] 144 blocks using style 1, 2, or 3 cannot be used in 600mm wide NGF frames.

See previous page for definition of variables.

Next Generation Frame System

Fibre Combination Blocks–Termination/Splice

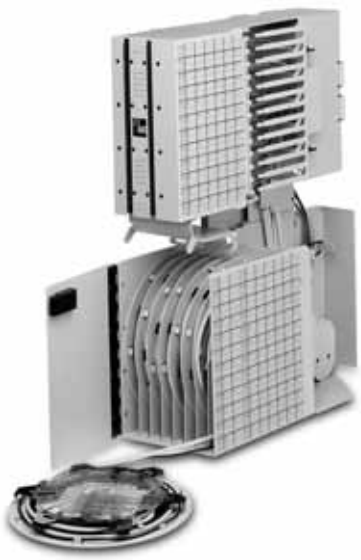

Fibre Combination Blocks (FCBs) provide a place to terminate pigtails and splice intrafacility and outside plant (IFC/OSP) cables on the frame. The blocks are available with several different adapter types in block configurations of 72 or 96-position . Also, a 144-position's FCB is available using an LX.5® or LC adapter. The termination portion of the fibre combination block utilises sliding adapter packs to gain easy access to connectors on both the front and rear side of the block. The block is available with factory-installed pigtails for easy installation. Splice trays are shipped with the block if ordered with pigtails; otherwise trays must be ordered separately. The block is shipped with a cable clamp for OSP/IFC. The FCB occupies two mounting positions on a frame section. Before ordering, determine the block orientation. FCBs may be ordered with a "left" orientation (mounts on the left side of the frame) or a "right" orientation (mounts on the right side of the frame).

Ordering information follows on next page.

Definition of Variables	
1	**Block Style** General adapter type required in the FCB
2	**Block Configuration** Maximum number of terminations that the FCB will accommodate when fully loaded
3	**Block Orientation** Vertical column of the frame the FCB is to be mounted on
4	**Adapter/Connector Type** Specific adapter/connector type required in the FCB
5	**Pigtail Type** Type of pigtail required
6	**Number of Pigtail Assemblies** Number of pigtails to be pre-installed in the FCB
7	**Splice Chip** Type of splice chip required for splice trays

6/07 • 6356_au •

Next Generation Frame System

Fibre Combination Blocks–Termination/Splice

Catalogue Number

NGF-CB _ _ _ 2 _ _ _ _ _

Block Style

1	1	SC
	2	FC/ST®
	3	E2000
	4	LX.5®/LC

Block Configuration

2	B	72
	C	96
	M	144 (LX.5® or LC only)[1]

Block Orientation

3	L	Left
	R	Right

Adapter Type Singlemode

4	7	SC UPC
	8	SC UPC, zirconia sleeve
	L	SC 8° APC
	L9	SC 9° APC
	V	E2000 8° APC
	2	FC UPC
	3	FC 8° APC
	4	ST® UPC
	N	LX.5® UPC (144 only)
	X	LX.5® APC (144 only)
	K	LC UPC (144 only)
	S	LC APC (144 only)

OR

Adapter/Connector Type Multimode (62.5/125)

A	FC
5	ST®
9	SC
Y	LX.5® (144 only)
P	LC (144 only)

Pigtail Assembly Type

5	0	No pigtails
	1	12-fibre pigtail
	2	12-fibre stranded Maxi-Strip
	4	8-fibre pigtail
	5	12-fibre ribbon

Number of Pigtail Assemblies

6	XX	Number of assemblies

Splice Chip

7	0	Empty
	1	Bare fusion
	2	Heat shrink fusion
	3	Mechanical (Elastomeric)
	6	Nortel QPAK
	7	Crimp (sandwich)
	8	Rotary
	9	FibrLok®
	4	16-position heat shrink fusion

[1]144-termination block requires the use of either:
Mechanical (elastomeric) (Code 3) splice tray when using mass fusion ribbon splicing
Nortel QPAK (Code 6) splice tray when using single fibre heat shrink fusion splicing
144 blocks using block style 1, 2, or 3 **cannot** be used in 600mm wide NGF frames.

Splice Trays For Fibre Combination Block

Splice trays are shipped with the block if it is ordered with pigtails; if pigtails are not included, splice trays are ordered seperately.

Catalogue Number

FST - DRS _ _ - _ _

Number of Splices

1	12	12 splices
	24	24 splices

Splice Tray Type

2	00	Empty tray*
	FT	Bare fusion
	HS	Heat shrink fusion
	MT	Mechanical (elastomeric)
	NT	Nortel QPAK
	ANT	Crimp (sandwich)
	RT	Rotary
	3M	FibrLok®

* Maximum size of chip allowed in empty tray: 0.3"H x 2.5"W x 3.6"L

Note: For LX.5® FCB with 12 fibre ribbon pigtails, select mechanical (MT) splicing only.

For LX.5® FCB with 12 fibre stranded pigtails select Nortel QPAK (NT) (compatible with heat shrink fusion), bare fusion or crimp only.

Next Generation Frame System

Sliding Adapter Packs

Sliding adapter packs house groups of fibre optic adapters and are mounted in Fibre Termination Blocks to provide easy access to connectors. Sliding adapter packs are available with SC, FC, ST®, E2000, LX.5® and LC adapters. The adapters come in packs of two, four, six and eight depending on the adapter type and the desired termination density. See table below for configuration guidelines.

Option A
(SC shown)

Option E
(ST® shown)

Sliding Adapter Pack Configuration Guidelines

Block Configuration	Adapter Type	Adapter Pack Configuration	Adapter Pack Option
72-Position	SC, E2000	2 Pack/4 Pack	A
72-Position	FC, ST®	6 Pack	E
96-Position	SC, FC, ST®, E2000	4 Pack/4 Pack	J
144-Position (block code'M')	LX.5®, LC	6 Pack/6 Pack	K

Catalogue Number

NGF- SAP ____ 0 ____

Adapter Type
Singlemode

5	7	SC UPC
	8	SC UPC, zirconia sleeve
	L	SC 8° APC
	L9	SC 9° APC
	V	E2000 8° APC
	2	FC UPC
	3	FC 8° APC
	4	ST® UPC
	N	LX.5® UPC (144 only)
	X	LX.5® APC (144 only)
	K	LC UPC (144 only)
	S	LC APC (144 only)

OR

Adapter Type
Multimode

9	SC
A	FC
5	ST®
Y	LX.5® (144 only)
P	LC (144 only)

Adapter Pack Option*

A	2 pack/4 pack
E	6 pack
J	4 pack/4 pack
K	6 pack/6 pack (all block code "M" blocks)

Fibre Connectivity Solutions • 6356_au • 6/07

Next Generation Frame System

Value-Added Module System Chassis

Next Generation Frame (NGF) Value-Added Modules are designed to support emerging circuit requirements. This high-density fibre frame solution provides unlimited expansion while optimising fibre cable management. The NGF system uses Mini Value-Added Modules to incorporate optical splitters for circuit monitoring and video distribution. Mini Value-Added Modules can also be configured with wavelength division multiplexing capabilities to increase transmission capacity over existing fibre lines. Various input and output interface options are available.

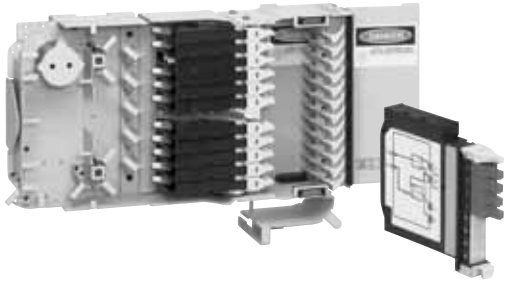

Features and Benefits

Enclosed plug-in modules
Optical components are protected from physical and environmental damage

Flexible platform
Modules can be created for new applications quickly and easily to meet customer requirements

Monitor and/or test
Enables providers to troubleshoot networks without forcing disruption of service

Custom configurations
Custom splitter configurations available upon request

VAM Chassis

The NGF VAM chassis is designed to mount on all standard NGF frame styles and is interchangeable with termination, splice, and storage modules. Each chassis accommodates up to twelve Mini-VAM modules.

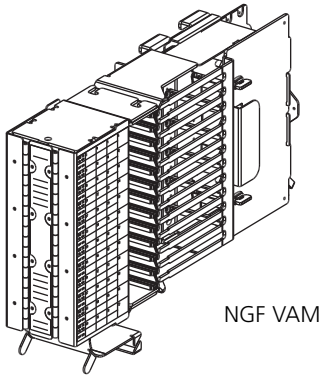

NGF VAM Chassis

Catalogue Number

NGF - TB _D_ _ _

Block Style

1	SC
2	FC/ST
3	E2000

Cable Exit Direction (Rear)

U	Upward
D	Downward

Block Orientation

L	Left
R	Right

NGF VAMs with LX.5® or LC adapters can be placed in any of these block styles. Please contact ADC KRONE Technical Assistance Center with any questions.

Next Generation Frame System

Value-Added Modules

Splitter Module

Catalogue Number

NGF-V _ __ __ ____ _ ___ ___ - __

Module Options

2	Input front, output front
5	Input rear, output front

Input Connector/Adapter

Output Connector/Adapter

Singlemode	
7U	SC UPC
7A	SC 8° APC
7K	SC 9° APC
8A	E2000 8° APC
2U	FC UPC
2A	FC 8° APC
4U	ST® UPC
LU	LX.5® UPC
LA	LX.5® APC
KU	LC UPC
KA	LC APC
00	Bare fibre
Multimode[1]	
9A	SC 50/125
9B	SC 62.5/125
2M	FC 62.5/125
2N	FC 50/125
LM	LX.5® 62.5/125
LN	LX.5® 50/125
5F	ST® 50/125
5U	ST® 62.5/125
00	Bare fibre

[1]Standard multimode couplers are for use with LED source only

Splitter Type

LEAVE BLANK	Wideband 1310 and 1550nm
G	1310nm wave-length flattened
J	1550nm wave-length flattened
M	Multimode couplers—optimised for use with laser or LED sources

Output Pigtail Length

Input Pigtail Length
Example (In Metres):
01 = 1m
10 = 10m
00 = Adapters only on input and output ports

Number of Splitters

A	Single splitter
B	Dual (2) splitter
C	Triple (3) splitter

Split Ratio (%)

2000	1x2	50/50
2100	1x2	55/45
2200	1x2	60/40
2400	1x2	70/30
2600	1x2	80/20
2800	1x2	90/10
2900	1x2	95/5
3900	1x3	33/33/33
4900	1x4	25/25/25/25
5300	1x5	20/20/20/20/20
6000	1x6	16.6/16.6/16.6 16.6/16.6/16.6
8000	1x8	12.5/12.5/...12.5
G116	1x16	6.25/6.25/6.25/...6.25

Connectorised Example

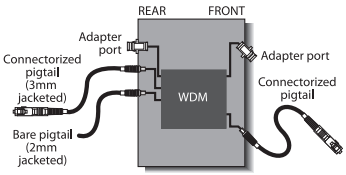

This chart shows the many options available for splitter modules. For assistance in configuring the module appropriate for your application, please contact ADC KRONE.

6/07 • 6356_au • Fibre Connectivity Solutions

Next Generation Frame System

Value-Added Modules

Splitter Module

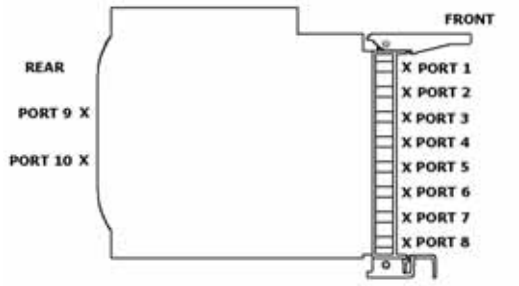

NGF-V—Next Generation Frame (NGF)
Available ports:

- 8 front
- 2 rear

Module Options

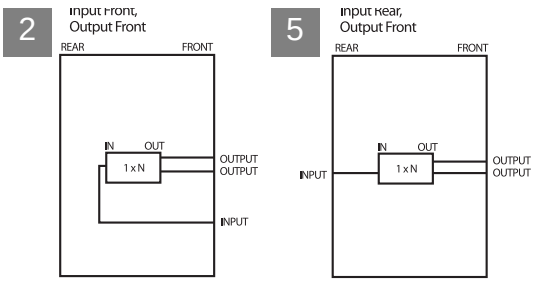

Next Generation Frame System

Value-Added Modules

Wavelength Division Multiplexer (WDM) Module

Catalogue Number

NGF-W _ _ _ _ _ _ _ _ - _

Configuration

2	MUX front, DEMUX front
5	MUX rear, DEMUX front

MUX Port Connector/Adapter

7U	SC UPC
7A	SC 8° APC
7K	SC 9° APC
8A	E2000 8° APC
2U	FC UPC
2A	FC 8° APC
4U	ST® UPC
LU	LX.5® UPC
LA	LX.5® APC
KU	LC UPC
KA	LC APC
00	Bare fibre

DEMUX Port Connector/Adapter

7U	SC UPC
7A	SC 8° APC
7K	SC 9° APC
8A	E2000 8° APC
2U	FC UPC
2A	FC 8° APC
4U	ST® UPC
LU	LX.5® UPC
LA	LX.5® APC
KU	LC UPC
KA	LC APC
00	Bare fibre

Module Configuration

A	Single
B	Dual
C	Triple

Isolation

1	Standard
2	High
3	Very High

WDM Type (λ_1, λ_2)

A	Unidirectional multiplexer
C	Unidirectional demultiplexer
E	Bidirectional λ_1 Tx/λ_2 Rx
G	Bidirectional λ_1 Rx/λ_2 Tx
J	45dB isolation, pass 1310
K	45dB isolation, pass 1550
L	(Dual only) unidirectional multiplexer, unidirectional demultiplexer[1]
M	(Dual only) bidirectional λ_1 Tx/λ_2 Rx, bidirectional λ_2 Tx/λ_1 Rx

[1] WDM Type "L" includes (1) unidirectional multiplexer (standard isolation) and (1) unidirectional demultiplexer (isolation specified by next character)

Splitter Type

LEAVE BLANK	Putty
B	Black

DEMUX Port Pigtail Length

MUX Port Pigtail Length

Example (In Metres):
01 = 1m
10 = 10m
00 = Adapters only on MUX and DEMUX ports

Wavelength

A	1310 (λ_1)/1550(λ_2)
B	1533 (λ_1)/1557(λ_2)
C	1310/1533/1557
E	1550 (λ_1)/1625(λ_2)
F	1310 (λ_1)/1625(λ_2)

This chart shows the many options available for WDM modules. For assistance in configuring the module appropriate for your application, please contact ADC KRONE.

In the ordering charts, the abbreviation "mux" references the multiplexed side of the WDM, the side where two optical signals coexist on one fibre. The abbreviation "demux" references the demultiplexed side of the WDM, the side where each signal appears on its own fibre. Both unidirectional and bidirectional WDMs are available as shown below.

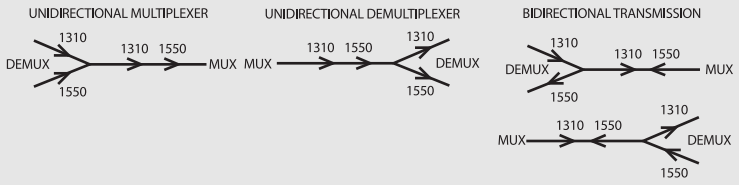

Connectorised Example

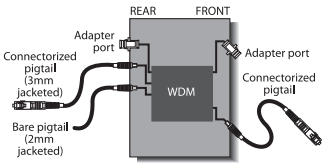

Next Generation Frame System

Value-Added Modules

Wavelength Division Multiplexer (WDM) Module

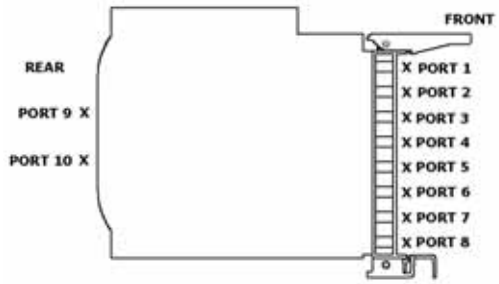

NGF-W—Next Generation Frame (NGF)
Available ports:

- 8 front
- 2 rear

WDM Configurations

2

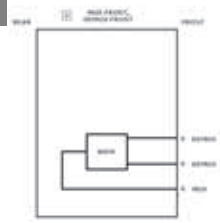

5

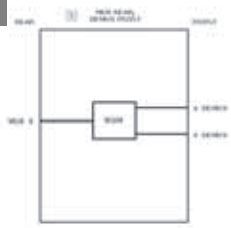

WDM Types

A

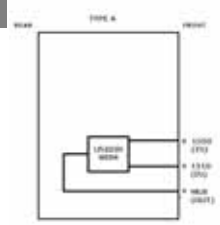

C

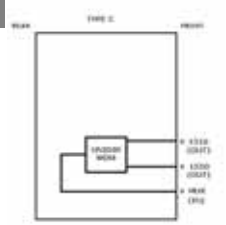

E

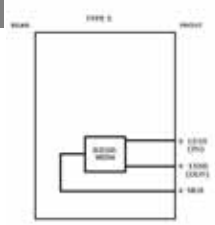

G

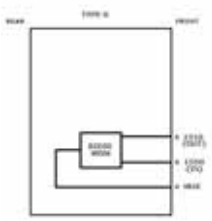

J

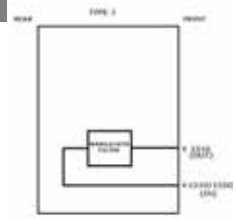

K

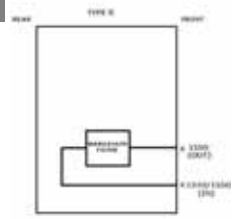

L

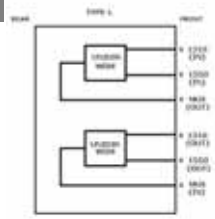

M

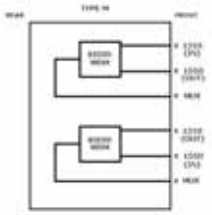

Next Generation Frame System

Value-Added Modules

Monitor Module

Catalogue Number

NGF-M _ _ _ _ _ _ _ _ - _

Input Connector/Adapter

Output Connector/Adapter

Monitor Connector/Adapter

Singlemode	
7U	SC UPC
7A	SC 8° APC
7K	SC 9° APC
8A	E2000 8° APC
2U	FC UPC
2A	FC 8° APC
4U	ST® UPC
LU	LX.5® UPC
LA	LX.5® APC
KU	LC UPC
KA	LC APC
00	Bare fibre
Multimode	
9A	SC 50/125
9B	SC 62.5/125
2M	FC 62.5/125
2N	FC 50/125
LM	LX.5® 62.5/125
LN	LX.5® 50/125
5F	ST® 50/125
5U	ST® 62.5/125
00	Bare fibre

Number of Circuits per VAM

1	1 circuit
2	2 circuits
3	3 circuits

Number of circuits is dependent on module type

Split Ratio (%)

K	99/1
B	95/5
A	90/10
E	80/20
H	70/30
J	60/40
L	50/50

Module Style

J	Dual monitor
B	Cross-connect customer premises
D	Dual monitor cross-connect
G	Dual monitor cross-connect
P	Customer premises
R	Single monitor cross-connect
C	Customer premises monitor module

Monitor Pigtail Length

Output Pigtail Length

Input Pigtail Length
Example (In Metres):
01 = 1m
10 = 10m
00 = Adapters only on input, output and monitor ports

This chart shows the many options available for monitor modules. For assistance in configuring the module appropriate for your application, please contact ADC KRONE.

Contact ADC KRONE for specifications and additional split ratios.

Fibre Connectivity Solutions • 6356_au • 6/07

Next Generation Frame System

Value-Added Modules

Monitor Module

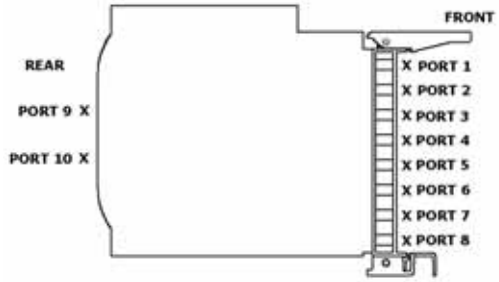

NGF-M—Next Generation Frame (NGF)
Available ports:

- 8 front
- 2 rear

Module Style

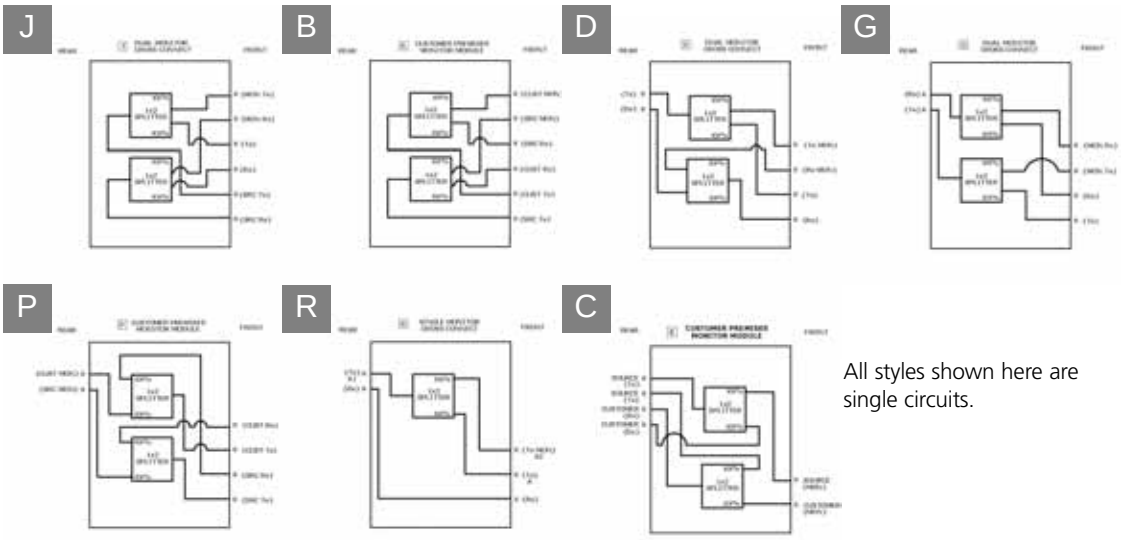

All styles shown here are single circuits.

Next Generation Frame System

Fibre Optic Terminal Jumper Storage Bay

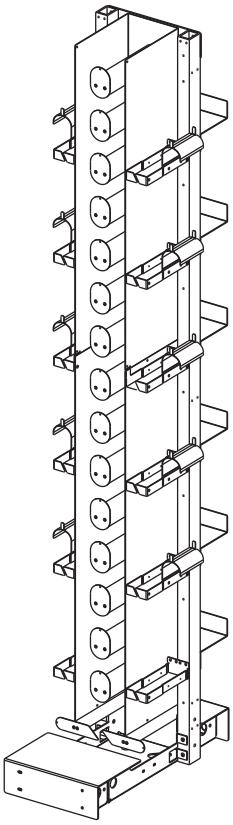

Front ISO View

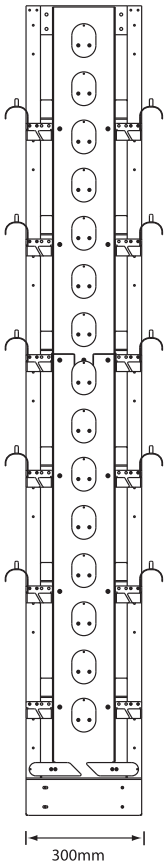

Front View
(NGF-ACCFOTSB300 shown)

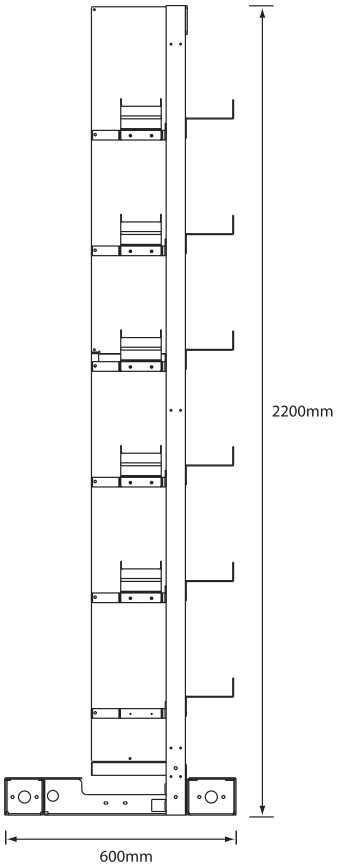

Side View

Optional fibre optic terminal (FOT) slack storage bays are used in the NGF lineup when equipment jumpers are being routed to the back of the NGF blocks **and** the slack in those jumpers needs to be stored at the NGF frame. If the slack will be stored elsewhere, the FOT storage bay is not required.

Ordering Information

Description	Dimensions (HxWxD)	Catalogue Number
FOT storage bay for 600mm FMDF lineups	2200mm x 300mm x 600mm	NGF-ACCFOTSB300
FOT storage bay for 600mm F3MDF lineups (not shown)	2200mm x 300mm x 480mm	NGF-F3ACCFOTSB300

A drawing of the FOT storage bay in a vertically zoned lineup appears on the next page.

Fibre Connectivity Solutions • 6356_au • 6/07

Next Generation Frame System

Fibre Optic Terminal Storage Panel

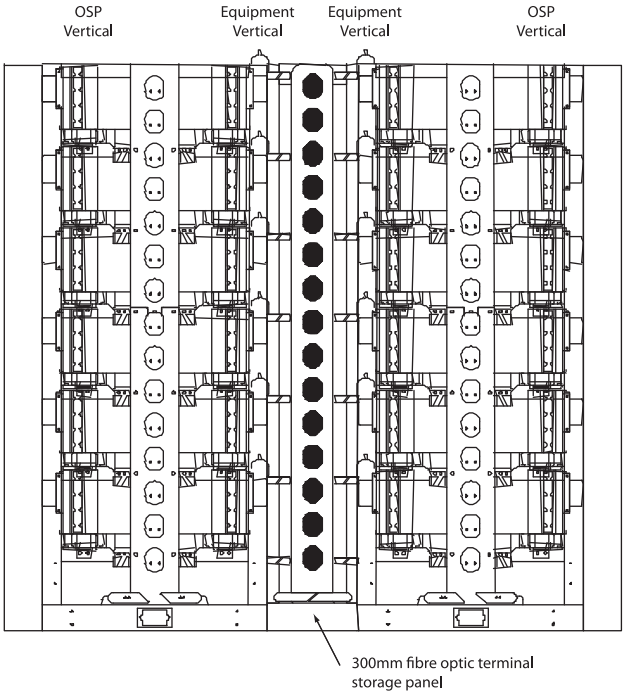

Equipment Bay

The NGF equipment bay provides a mounting location for 19-inch rack mount equipment within an FMDF lineup. The equipment deployment in the bay can include video transmitters, RF Splitter/Combiners, or Remote Fibre Test Systems. NGF Equipment Bays are available for FMDF lineups (600mm deep) and F3MDF lineups (480mm deep).

As applications and requirements for equipment bays in NGF lineups vary greatly, ordering information for equipment bays can be obtained by contacting your ADC KRONE representative.

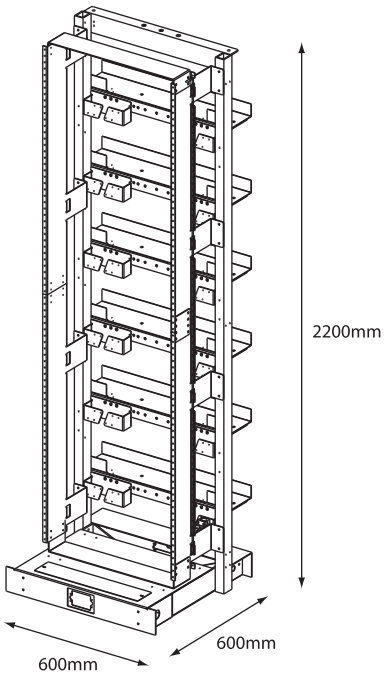

Next Generation Frame System

Accessories

End Guard

The end guard provides protection for the fibres entering and exiting frames at the ends of a lineup.

Ordering Information

Description	Catalogue Number
FMDF end guard, 600mm deep	NGF-ETSIACCEG
F3MDF end guard, 480mm deep	NGF-ETSIF3ACCEG

Cable Clamp Kits

Cable clamp kits are available for securing intrafacility (IFC)/OSP cable or equipment (fibre optic terminal/FOT) jumpers on the rear of the fibre termination block (FTB).

Ordering Information

Description	Catalogue Number
Cable clamp kit for FOT patch cords *included with Fibre Termination Blocks loaded with adapters only*	NGF-ACCCLMP04
Cable clamp kit for IFC/OSP cables *included with Fibre Termination Blocks with IFC*	NGF-ACCCLMP08

Rack Installation Kits

Ordering Information

Description	Catalogue Number
Rack installation kit for concrete floor, kit includes: (2) M8 bolts, 90mm (4) M8 nuts (8) flat washers (4) lock washers shims and anchor plates	RAC-MX0616
Rack installation kit for raised floor, kit includes: (4) threaded rods M12 x 1m (12) heavy nuts, lock and flat washers (4) nuts with springs, M12 (2) 1.8m unistrut (1) anchor kit	RAC-MX0615

AC Outlet Kits

Please contact your ADC KRONE representative for catalogue numbers.

NG3™ High-Density Fibre Frames

Introduction

With the unprecedented growth of optical fibre counts seen within service provider networks and the increased demand to optimise floor space, fibre cable management has become a critical element in providing a robust and reliable fibre network. Simply adding additional fibre distribution frames (FDF) to existing lineups or increasing the termination density of a traditional FDF system is not enough, as the horizontal and vertical cable troughs become too congested and difficult to manage.

As the number of fibre terminations in the FDF and in the FDF lineups increases, the need for strong cable management within the fibre distribution frame is even more important. Bend radius protection, easy connector access and clear, easy to follow fibre routing paths are key aspects of fibre cable management. High-density/high-capacity fibre distribution frame systems need to focus on these key cable management aspects. The system needs to ensure that all fibres have full bend radius protection throughout the entire system. This complete bend radius protection is critical in ensuring the optical performance and long-term reliability of the fibre network. In order to achieve high density in a fibre distribution frame, the adapter ports must be placed closer together. The system must allow for easy access to the connectors on the front and rear of those ports for insertion and removal. When gaining access to ports, the technician cannot be forced to move other installed fibres out of the way. The cable routing paths provided are critical in ensuring that jumpers are routed correctly and are accessible for easy future tracing and removal. The routing paths in the system should be such that they are easy for a technician to follow and limit the number of choices to make during jumper routing. These cable management features must all be designed to make the frame system as technician-friendly as possible.

Meeting the Generation III requirements of Telcordia GR-449-CORE, Issue 2, the NG3™ High-Density Fibre Distribution Frame system is designed to provide the highest fibre termination capacity within a lineup while providing the best cable management features possible. The NG3 system is designed around two key components: the NG3 hinged, high-density termination panel and the NG3 Main Distributing Frame. These key components combine to provide a flexible, technician friendly system that will meet the current and future needs of service providers.

Frame Features and Benefits

Industry Standard Frame System

- *Designed and tested to Telcordia GR-449-CORE, Issue 2 requirements, including OC-192 and OC-768 BER Testing*

Zone 4 Seismic Rated with 100 Pound Overhead Load

NEBS Level 3 Compliant

Ample Trough Space

Reduces jumper pile-up and congestion

- *Reduces maintenance time due to easy removal and tracing of jumpers*
- *Minimises risk of microbends or damage to fibre*

Built-in Jumper Storage Panel

Minimises number of required jumper lengths
Maintains fibre bend radius
Simplifies frame installation

- *Saves money by reducing the number of different jumper lengths that have to be kept in inventory*
- *Minimises risk of microbends or damage to fibre*

Bend Radius Protection at Every Turn

- *NG3 provides complete bend radius at every turn to ensure network performance and reliability*

Panel Features and Benefits

Uses Sliding Adapter Packs

Promotes high density
Provides easy access to connectors

- *Saves valuable floor space*
- *Reduces time required for operations and maintenance*

Ensures Bend Radius Protection

Provides Easy Access to Connectors

Protects Technicians from Lasers

NG3™ High-Density Fibre Frames

Introduction

Frames

ADC KRONE's Next Generation Frame product line has fibre frames designed to fit a variety of termination, splice, and storage applications. Each frame option is designed with an emphasis on superior cable management and ease of use, including features such as ample trough space for cable and jumpers, easy access to connectors, and storage for jumpers. The frame sections are shipped from the factory fully equipped with all cable management hardware including a built-in jumper storage panel.

Hinged Fibre Termination Panel

Fibre Termination Panels are available with SC, FC, ST® and E-2000 adapters in 72-position configurations. The hinged panel utilises sliding adapter packs to gain easy access to both the front and rear connectors. Hinged panels can be ordered with adapters only or with factory-terminated IFC.

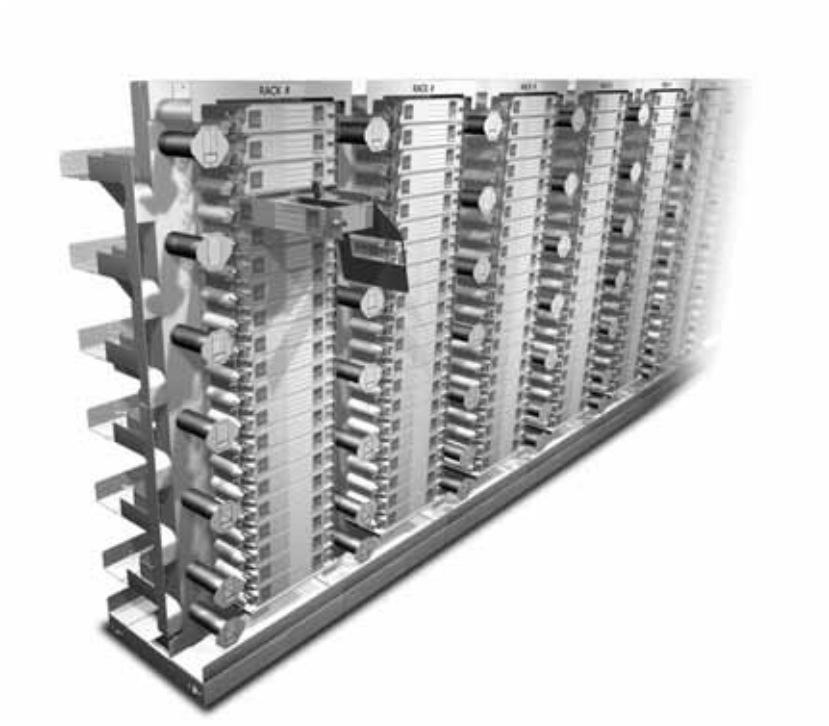

NG3™ High-Density Fibre Frames
Introduction

Important Facts on NG3™ Lineup Capacity

	NG3 High-Density Fibre Distribution System (Generation III)	Standard FDF System (Generation I & II)
Frame Termination Capacity	1,440	648
Horizontal Trough Configuration	(6) five-inch wide rear troughs and eight-inch wide front upper and lower cable troughs	five-inch wide front upper and lower cable troughs
Maximum number of terminations allowed in a frame lineup before exceeding 51mm pileup of 2mm jumpers*	25,920	4,120
Maximum number of terminations allowed in a frame lineup before exceeding 51mm pileup of 1.7mm jumpers*	37,440	6,422
Maximum number of frames in a lineup using 2mm jumpers	18	6
Maximum number of frames in a lineup using 1.7mm jumpers	26	10
Recommended minimum number of frames for initial installation	1	1

*Calculations based on Telcordia GR-449-CORE Issue 2 requirements.
System capacity will increase if smaller diameter jumpers are used and decrease if larger diameter jumpers are used.

NG3 Frame Considerations

Flexibility/Ability to grow	Yes
Interconnect	Supports
Cross-connect	Recommended
On-frame splicing	Supports
Off-frame splicing	Recommended
Rear access required	Yes
All front access	No
Footprint	762mm wide x 610mm deep
Horizontal trough space available	30"

Block Terminations Capacity	Frame Capacity
72	1440

NG3™ High-Density Fibre Frames

Introduction

Frame Zoning

The NG3™ frame system is a flexible modular solution that will support numerous network deployment strategies and architectures. It can grow to a lineup of over 20,000 terminations. It is important to plan for this growth from the beginning and to dedicate the required floor space to ensure optimum growth. In cross-connect applications the NG3 frame sections within the lineup are typically zoned for OSP and FOT terminations by frame. Zoning by frame means that an entire frame is dedicated to either OSP terminations or to FOT terminations. The NG3 lineup can grow from left to right, right to left or from the centre out, depending on network requirements. The diagram below shows zoning by frame and indicates a 1:1 OSP to FOT ratio. The system can easily accommodate any OSP to FOT ratio where FOT equipment may be cross-connected to other FOT equipment.

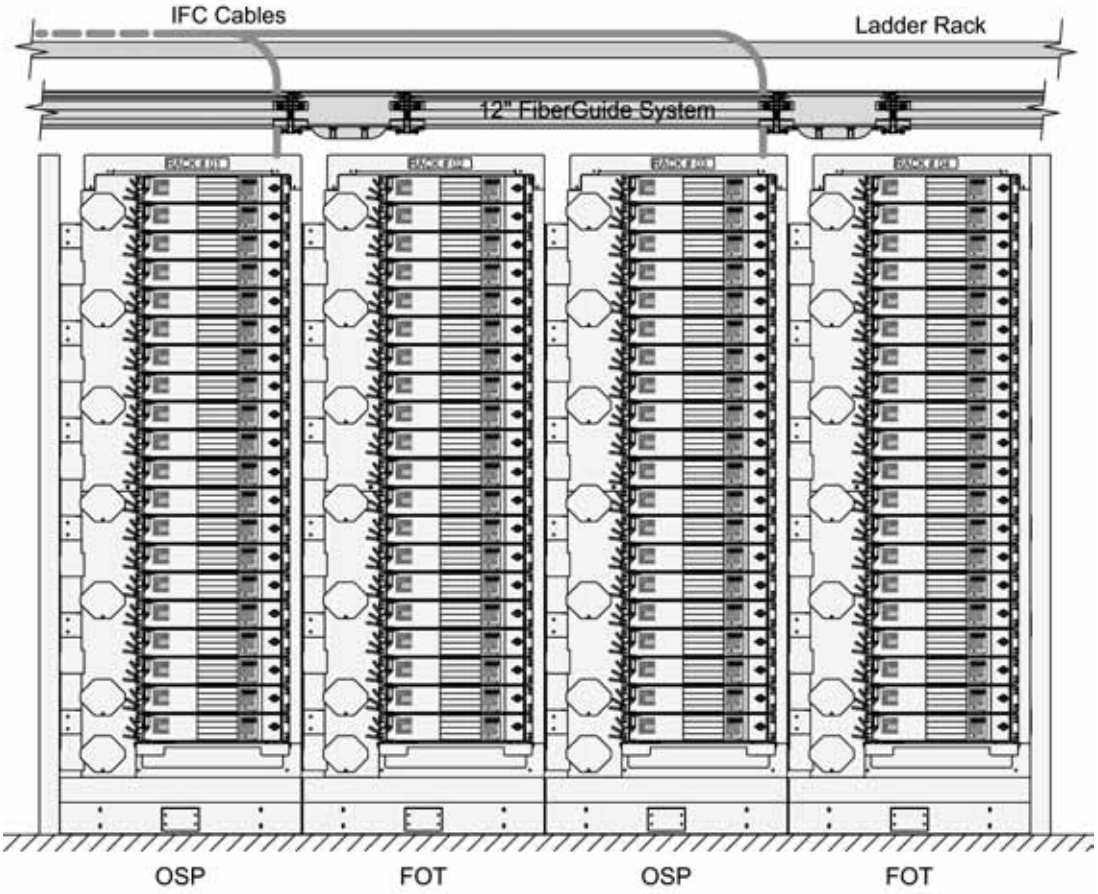

NG3™ High-Density Fibre Frames
Introduction

Off-Frame Splicing / On-Frame Splicing

The NG3™ system can be deployed in a network using off-frame or on-frame splicing. As OSP fibre cables enter a facility, they will at some point be spliced to indoor fibre cables for routing and termination within the facility. This splicing can either be done in a location separate from the fibre distribution frame (off-frame splicing) or it can be done within the framework of the fibre distribution frame (on-frame splicing).

Off-frame splicing

There are several operational and floor space advantages that off-frame splicing provides over on-frame splicing. In an off-frame splicing fibre distribution frame scenario, the NG3 will only contain panels dedicated to fibre connector terminations, thus increasing the termination capacity of the frame. The panels will include intrafacility cable (IFC) that runs from the FDF to a splice location elsewhere in the office. Intrafacility cables have counts of 72, 144, or 216 fibres in either a ribbon or stranded configuration. These cables have a thick outer jacket and a crush resistance (per GR-409-CORE) that allows them to be routed directly on the ladder racking or auxiliary framing in the office. A special raceway system is not required for these intrafacility cables. Splicing the OSP cable to the intrafacility cable can be done in a location near the OSP cable building entrance or in another location within the office. ADC KRONE has several solutions available to accommodate this splicing function. As the splicing is in a separate location from the fibre terminations, issues with different craft personnel trying to work in the same space is eliminated.

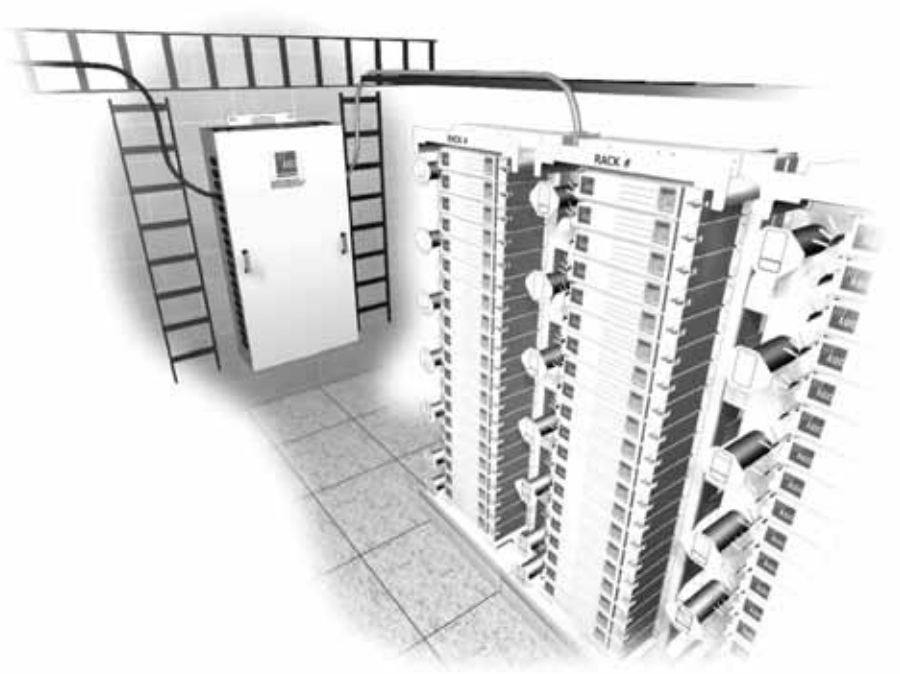

While the NG3 system is typically used in off-frame splicing applications, on-frame splicing solutions are supported as well, without any change in frame hardware.

NG3™ High-Density Fibre Frames

Introduction

On-frame splicing

The NG3™ frame system can accommodate on-frame splicing using a custom termination/splice panel. The NG3 high-density termination/splice panel allows for up to 72 terminations with splicing in a 88.9mm (3.5") high space. ADC recommends that all splicing be done per Telcordia GR-1095-CORE and/or GR-765-CORE requirements.

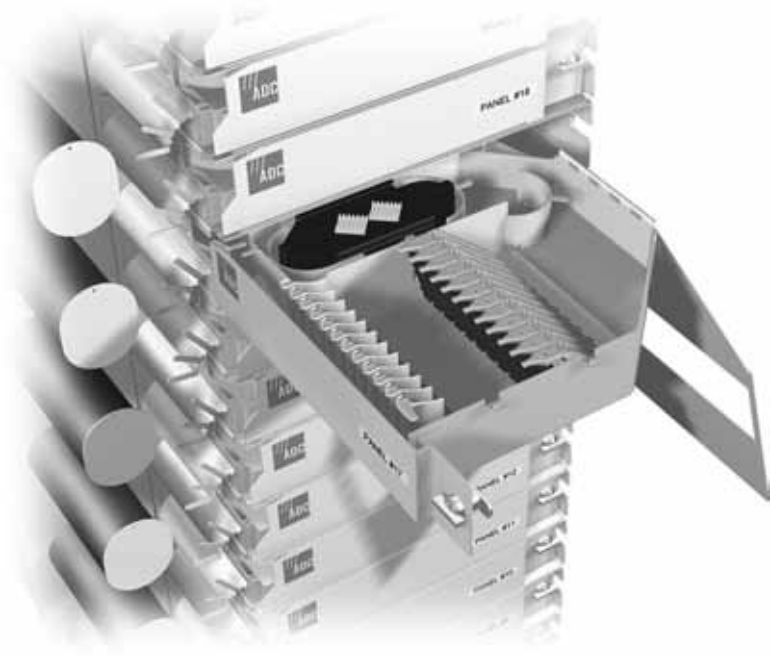

NG3™ High-Density Fibre Frames

Fibre Main Distributing Frame (FMDF)

The high-density FMDF is the cornerstone of the NG3™ product line. This frame utilises an industry standard base frame and has six horizontal rear troughs, and front upper and lower troughs. This abundant trough space minimises fibre pileup and congestion, leading to easier jumper traceability and removal. The frame has mounting positions for 20 NG3 72-position, high-density fibre termination panels for a total of 1,440 terminations. The vertical cable guide and slack storage system are designed to accommodate 1,440 terminations using 2mm patch cords while maintaining a 38.1mm (1.5") bend radius protection at all bending locations. For additional flexibility in cable routing, the frame also includes a built-in jumper storage panel on the left side. The open design of this panel allows for nearly direct routing and shorter patch cord lengths.

The NG3 frame system meets interoperability standards covered in GR-449-CORE, Issue 2 as well as accommodates standard 19-inch wide rack mount equipment.

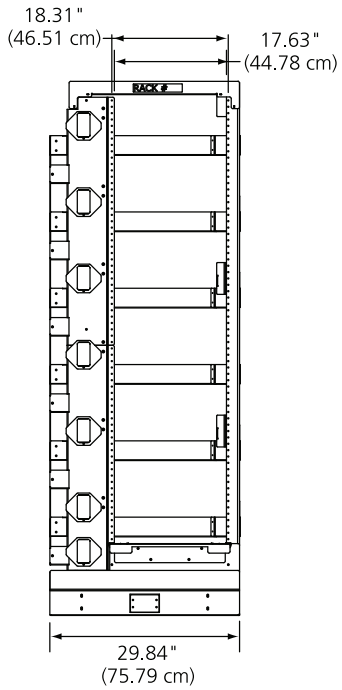

Front View

Front View

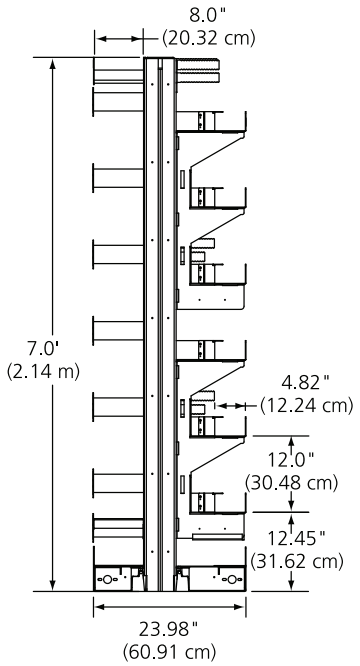

Right Side View

Side View

ISO View

Ordering Information

Description	Dimensions and Weight	Catalogue Number
30" wide frame section *1,440 terminations*	7' x 30" x 24" (2.14m x 76.2cm x 61cm) 200 lbs.	NG3-MFTWN7A00

Note: There are no special engineering procedures for deployment of NG3 hardware at remote sites, no recommended maintenance spare stock of NG3 parts needed, and no special test equipment required. The frame does not include floor anchors. If required, a floor anchor kit must be ordered separately.

NG3™ High-Density Fibre Frames

Hinged Fibre Termination Panels – Unterminated (Adapter Only)

Hinged fibre termination panels without fibre can be ordered fully loaded with adapters. All blocks with adapters only are configured to terminate single or dual jumpers on the rear of the block. If a multi-fibre breakout style cable (i.e., OSP/IFC) is to be terminated to the rear of the block, a separate clamping kit is required (see page 19). ADC KRONE does not recommend mounting the NG3 hinged fibre termination panel in any frame except ADC KRONE's NG3 High-Density Distribution Frame.

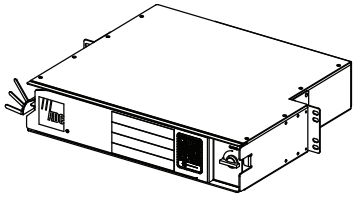

Front ISO View

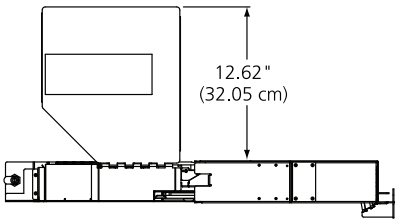

Right Side View
Shown with Tray Open and
Tray Cover at Tallest Position
For Simplicity, Labels not Shown

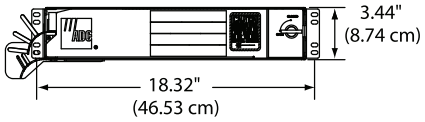

Front View

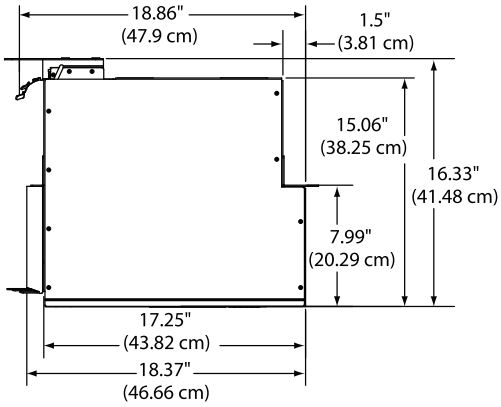

Top View

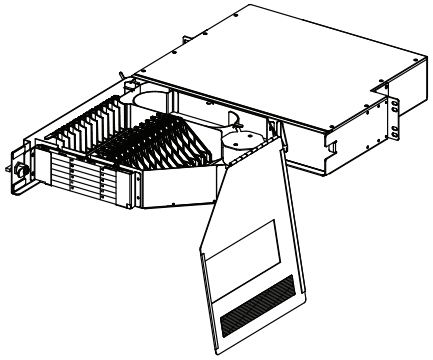

Ordering Information

Catalogue Number
NG3-TPA __ 0 0

Adapter Type Singlemode

7	SC ultra polish
8	SC ultra polish zirconia sleeve
L	SC angled polish
2	FC ultra polish
3	FC ultra polish zirconia sleeve
Q	FC angled polish
4	ST® ultra polish
V	E-2000 angled polish
N	LX.5® ultra polish
X	LX.5® angled polish
K	LC ultra polish

OR

Adapter Type Multimode (62.5/125)

9	SC
A	FC
5	ST®
Y	LX.5®
P	LC

NG3™ High-Density Fibre Frames

Hinged Fibre Termination Panels – Unterminated (Adapter Only)

Cable Clamping/Block Conversion Kits

Adapter-only panels ordered from page 3.39 are configured to accommodate single fibre jumpers or multifibre breakout cables. Additional hardware will be required to load a preterminated intrafacility (IFC) cable. Panel conversion kits are available to convert adapter only panels to panels that will accept preterminated IFC. The conversion kit contains the cable management hardware, brackets and cable clamps required to convert the panel.

Ordering Information

Description	Catalogue Number
FOT to IFC panel conversion kit	NG3-ACCIFCKIT

NG3™ High-Density Fibre Frames

Hinged Fibre Termination Panels — Preterminated

Catalogue Number

NG3-TPA

Adapter/Connector #1 Singlemode

1	7	SC ultra polish
	8	SC ultra polish zirconia sleeve
	L	SC angled polish
	2	FC ultra polish
	3	FC ultra polish zirconia sleeve
	Q	FC angled polish
	4	ST® ultra polish
	V	E-2000 angled polish
	N	LX.5® ultra polish
	X	LX.5® anled polish
	K	LC ultra polish

OR

Adapter/Connector #1 Multimode (62.5/125)

9	SC
A	FC
5	ST®
Y	LX.5®
P	LC

Connector #2 Singlemode

2	0	No connector/stub end
	7	SC ultra polish
	8	SC ultra polish zirconia sleeve
	L	SC angled polish
	2	FC ultra polish
	3	FC ultra polish zirconia sleeve
	Q	FC angled polish
	4	ST® ultra polish
	V	E-2000 angled polish
	N	LX.5® ultra polish
	X	LX.5® anled polish
	K	LC ultra polish

OR

Connector #2 Multimode (62.5/125)

0	No connector/stub end
9	SC
A	FC
5	ST®
Y	LX.5®
P	LC

Cable Length

4	XXX	Length in metre s

IFC Type Singlemode †

			Glass Type
3	ZB	72 fibre stranded	House cable*
	ZD	144 fibre stranded[1]	House cable*
	AA	12 fibre stranded	Corning
	BA	24 fibre stranded	Corning
	CA	36 fibre stranded	Corning
	2A	48 fibre stranded	Corning
	VA	72 fibre stranded	Corning
	FH	144 fibre stranded[1]	Corning
	GA	12 fibre ribbon	Sumitomo
	HA	24 fibre ribbon	Sumitomo
	MA	36 fibre ribbon	Sumitomo
	JA	48 fibre ribbon	Sumitomo
	KA	72 fibre ribbon	Sumitomo
	FJ	144 fibre ribbon[1]	Sumitomo
	K3	216 fibre ribbon[1]	Sumitomo

OR

IFC Type Multimode (62.5/125)

		Glass Type
AM	12 fibre stranded	Corning
BM	24 fibre stranded	Corning
DM	36 fibre stranded	Corning
2M	48 fibre stranded	Corning
VM	72 fibre stranded	Corning
YM	144 fibre stranded	Corning

† Other cable types are available upon request. Please contact your ADC KRONE representative.

* House cable will use Corning SMF-28, Sumitomo, Alcatel or similar singlemode fibre based on current market availability.

[1] All panels are loaded with 72 adapters. 144 fibre (stranded and ribbon) cables are attached to 2 panels. 216 fibre (ribbon) cables are attached to 3 panels.

Definition of Variables	
1	**Adapter/Connector #1** Specific adapter/connector type required in the FTB. Refers to the adapter/connector type at the FTB
2	**Connector #2** Specific connector type required at the cable end opposite the FTB
3	**Cable Type** Type of cable to be terminated to the FTB
4	**Cable Length** Required length of the cable terminated to the FTB

Fibre Connectivity Solutions • 6356_au • 6/07

NG3™ High-Density Fibre Frames

Sliding Adapter Packs

Sliding adapter packs house groups of fibre optic adapters and are mounted in Fibre Termination Blocks to provide easy access to connectors. Sliding Adapter Packs are available with SC, FC, ST®, and E-2000 adapters. The adapters come in packs of six.

Catalogue Number

NGF- SAP ____ 0 ____

Adapter Type
Singlemode

5	7	SC UPC
	8	SC UPC, zirconia sleeve
	L	SC 8° APC
	L9	SC 9° APC
	V	E2000 8° APC
	2	FC UPC
	3	FC 8° APC
	4	ST® UPC
	N	LX.5® UPC (144 only)
	X	LX.5® APC (144 only)
	K	LC UPC (144 only)
	S	LC APC (144 only)

OR

Adapter Type
Multimode

9	SC
A	FC
5	ST®
Y	LX.5® (144 only)
P	LC (144 only)

Adapter Pack Option*

A	2 pack/4 pack
E	6 pack
J	4 pack/4 pack
K	6 pack/6 pack (all block code "M" blocks)

NG3™ High-Density Fibre Frames

Accessories

Equipment Bay

The NG3™ Equipment Bay provides a mounting location for 19-inch rack mount equipment within a lineup. The equipment deployment in the bay can include video transmitters, RF Splitter/Combiners, or Remote Fibre Test Systems.

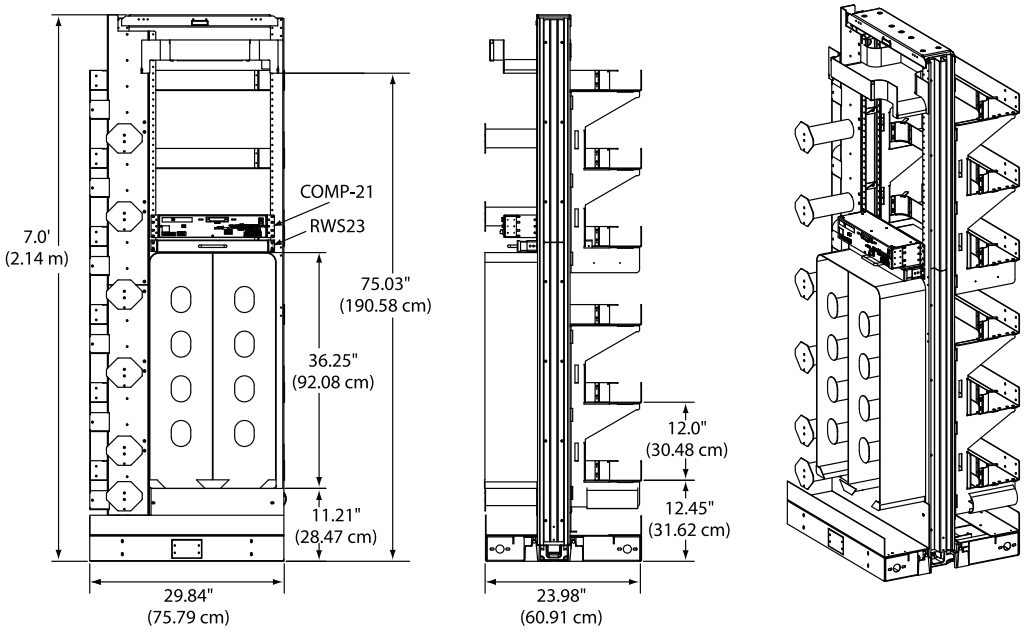

Front View | Side View | ISO View

Ordering Information

Description	Dimensions (HxWxD)	Catalogue Number
Miscellaneous Equipment Bay Includes: Base NG3 frame with rear horizontal troughs Communications panel (COMP-21) Writing shelf (RWS23) Slack storage system Auxiliary lower slack storage system Upper cross-aisle (cross-aisle bridge compatible) front upper cable trough 53.34mm (21") of open mounting space	7' x 30" x 24" (2.14m x 76.2cm x 61cm)	NG3-EBTWN7ASC

Rear-Facing Fibre Optic Terminal Storage Panel (FOTSP)

In cross-connect applications, a jumper (often single fibre) is routed from the Fibre Optic Terminal (FOT) equipment to the rear port of an adapter-only NG3™ panel through a fibre raceway system, like ADC KRONE's FibreGuide® system. Traditionally the excess slack in those jumpers has been stored at the FOT equipment end. However, there typically is not a provision for effectively storing excess jumper slack near the FOT equipment. The NG3 system includes an optional system for storing this excess jumper slack at the fibre distribution frame. The Fibre Optic Terminal Equipment Jumper Storage Panel (FOTSP) is a filler panel that mounts next to the NG3 frame and provides storage capacity for up to 3.7m(12') of excess jumper slack. The FOTSP is mounted to the left side of the frame it is serving and is accessed from the rear of the frame.

Ordering Information

Description	Dimensions (HxWxD)	Catalogue Number
FOTSP for use with single and dual jumpers	7' x 12" x 24" (2.14m x 30.48cm x 61cm)	NG3-FOTSP3TWN7A12

NG3™ High-Density Fibre Frames

Value-Added Module System

Chassis

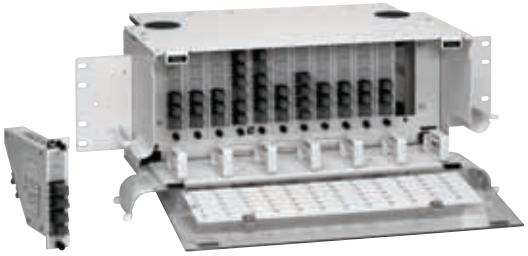

The 7-inch (17.78 cm) VAM chassis is designed to accommodate a maximum of 12 plug-in modules, 12 bulkhead plates, 12 blank plates, or any combination thereof. The mounting slots are oriented vertically. Each 7-inch chassis requires two consecutive NG3 panel mounting positions.

The 3.5-inch (8.89 cm) VAM chassis is designed to fit into any 19 or 23-inch (48.26 cm or 58.42 cm) environment. It can accommodate a maximum of four plug-in modules, four bulkhead plates, four blank plates or any combination thereof. The mounting slots are oriented horizontally.

Ordering Information

Description	Dimensions (HxWxD)	Catalogue Number
7" unloaded chassis; VAMs mount vertically; accommodates up to 12 modules	7" x 19" x 11" (17.78 x 48.26/58.42 x 27.94cm)	FVM-VLM19X700-W

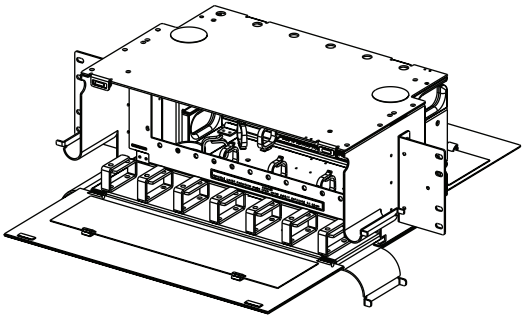

Ordering Information

Description	Dimensions (HxWxD)	Catalogue Number
3.5" unloaded chassis; VAMs mount horizontally; accommodates up to 4 modules	3.50" x 18.76" x 11" (8.89 x 47.65 x 27.94cm)	FVM-LGX19X350-W

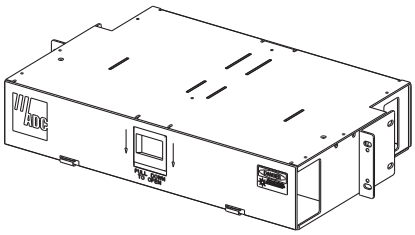

6/07 • 6356_au

NG3™ High-Density Fibre Frames

Value-Added Module System

Splitter Modules

Catalogue Number

VLM-__ __ __ __ __ __ __ __ __ __ __ __

Module Option

2	Input front, output front
5	Input rear, output front

Input Connector/Adapter Singlemode

2U	FC ultra polish
2A	FC angled polish
4U	ST® ultra polish
7U	SC ultra polish
7A	SC angled polish
8A	E-2000 angled polish
LA	LX.5® angled polish
00	Bare fibre

or

Multimode**

5F	ST® 50/125
5U	ST® 62.5/125
9A	SC 50/125
9B	SC 62.5/125
2M	FC 62.5/125
2N	FC 50/125
LM	LX.5® 62.5/125
LN	LX.5® 50/125
00	Bare fibre

Output Connector/Adapter Singlemode

2U	FC ultra polish
2A	FC angled polish
4U	ST® ultra polish
7U	SC ultra polish
7A	SC angled polish
8A	E-2000 angled polish
LA	LX.5® angled polish
00	Bare fibre

or

Multimode**

5F	ST® 50/125
5U	ST® 62.5/125
9A	SC 50/125
9B	SC 62.5/125
2M	FC 62.5/125
2N	FC 50/125
LM	LX.5® 62.5/125
LN	LX.5® 50/125
00	Bare fibre

Split Ratio*

2000	1x2	50/50
2100	1x2	55/45
2200	1x2	60/40
2300	1x2	65/35
2350	1x2	66.6/33.3
2400	1x2	70/30
2500	1x2	75/25
2600	1x2	80/20
2700	1x2	85/15
2800	1x2	90/10
2900	1x2	95/5
2950	1x2	99/1
2030	1x2	50/50
3900	1x3	33/33/33
4900	1x4	25/25/25/25
5300	1x5	20/20/20/20/20
6000	1x6	16.6/16.6/...16.6
7000	1x7	14.3/14.3/...14.3
8000	1x8	12.5/12.5/...12.5
9000	1x9	11.1/11.1/...11.1
A110	1x10	10/10/10/...10
B111	1x11	9.1/9.1/...9.1
C112	1x12	8.33/8.33...8.33
D113	1x13	7.7/7.7/...7.7
E114	1x14	7.14/7.14...7.14
F115	1x15	6.66/6.66/...6.66
G116	1x16	6.25/6.25/...6.25
M132	1x17	3.125/3.125/...3.125

Output Pigtail Length

Input Pigtail Length
Example (In Metres):
01 = 1 m
10 = 10 m
00 = Adapters only on input and output ports

Number of Splitters

A	Single splitter
B	Dual splitter
C	Triple splitter

Other split ratios are available.
Visit our website at www.adckrone.com.

**Contact ADC for multimode specifications and available split ratios

2 Input Front, Output Front

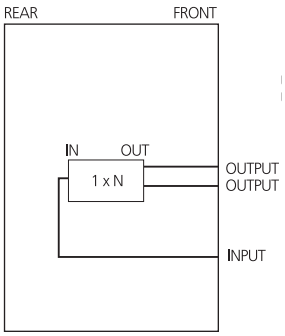

5 Input Rear, Output Front

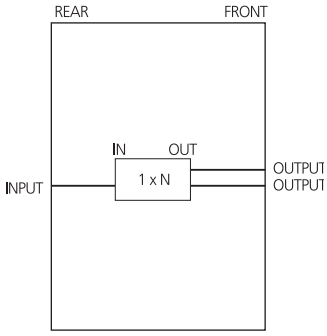

NG3™ High-Density Fibre Frames

Value-Added Module System

WDM Modules

Catalogue Number

VLM-W__ __ __ __ __ __ __ __ ___ ___

Configuration

2	MUX front, DEMUX front
5	MUX rear, DEMUX front

Mux Port Connector/Adapter

2U	FC ultra polish
2A	FC angled polish
4U	ST® ultra polish
7U	SC ultra polish
7A	SC angled polish
8A	E-2000 angled polish
LA	LX.5® angled polish
00	Bare fibre

Demux Port Connector/Adapter

2U	FC ultra polish
2A	FC angled polish
4U	ST® ultra polish
7U	SC ultra polish
7A	SC angled polish
8A	E-2000 angled polish
LA	LX.5® angled polish
00	Bare fibre

Module Configuration

A	Single
B	Dual
C	Triple

WDM Type (λ_1, λ_2)*

A	Unidirectional multiplexer
C	Unidirectional demultiplexer
E	Bidirectional λ_1 Tx/λ_2 Rx
G	Bidirectional λ_1 Rx/λ_2 Tx
J	45 dB isolation, pass 1310
K	45 dB isolation, pass 1550
L	(Dual only) unidirectional multiplexer, unidirectional demultiplexer**
M	(Dual only) bidirectional λ_1 Tx/λ_2 Rx, bidirectional λ_2 Tx/λ_1 Rx

** WDM Type "L" includes
(1) unidirectional multiplexer
(standard isolation) and
(1) unidirectional demultiplexer
(isolation specified by next character)

Demux Port Pigtail Length

Mux Port Pigtail Length
Example (In Metres):
01 = 1 m
10 = 10 m
00 = Adapters only on mux and demux ports

Wavelength

A	1310 (λ_1)/1550(λ_2)
B	1533 (λ_1)/1557(λ_2)
E	1550 (λ_1)/1625(λ_2)
F	1310 (λ_1)/1625(λ_2)

Isolation*

1	Standard
2	High
3	Very high

2 Input Front, Output Front

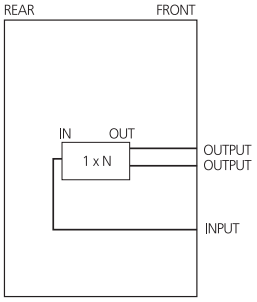

5 Input Rear, Output Front

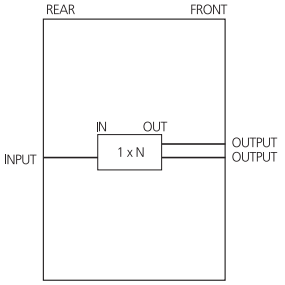

In the ordering charts, the abbreviation "mux" references the multiplexed side of the WDM, the side where two optical signals coexist on one fibre. The abbreviation "demux" references the demultiplexed side of the WDM, the side where each signal appears on its own fibre. Both unidirectional and bidirectional WDMs are available as shown below.

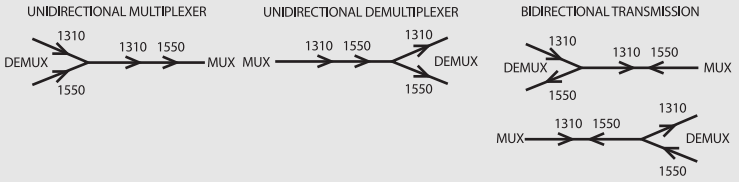

NG3™ High-Density Fibre Frames

Value-Added Module System

Monitor Modules

Catalogue Number

VLM-M_ _ _ _ _ _ _ _ _ _

Input Connector Type Singlemode

2U	FC ultra polish
2A	FC angled polish
4U	ST® ultra polish
7U	SC ultra polish
7A	SC angled polish
8A	E-2000 angled polish
LA	LX.5® angled polish
00	Bare fibre

Multimode** **or**

5F	ST® 50/125
5U	ST® 62.5/125
9A	SC 50/125
9B	SC 62.5/125
2M	FC 62.5/125
2N	FC 50/125
LM	LX.5® 62.5/125
LN	LX.5® 50/125
00	Bare fibre

Output Connector Type Singlemode

2U	FC ultra polish
2A	FC angled polish
4U	ST® ultra polish
7U	SC ultra polish
7A	SC angled polish
8A	E-2000 angled polish
LA	LX.5® angled polish
00	Bare fibre

Multimode** **or**

5F	ST® 50/125
5U	ST® 62.5/125
9A	SC 50/125
9B	SC 62.5/125
2M	FC 62.5/125
2N	FC 50/125
LM	LX.5® 62.5/125
LN	LX.5® 50/125
00	Bare fibre

Number of Circuits per VAM

1	1 circuit
2	2 circuits
3	3 circuits

Split Ratio*

A	90/10
B	95/05
C	50/50
E	80/20
F	75/25
H	70/30
J	60/40
K	99/01

Monitor Connector Type Singlemode

2U	FC ultra polish
2A	FC angled polish
4U	ST® ultra polish
7U	SC ultra polish
7A	SC angled polish
8A	E-2000 angled polish
LA	LX.5® angled polish
00	Bare fibre

Multimode** **or**

5F	ST® 50/125
5U	ST® 62.5/125
9A	SC 50/125
9B	SC 62.5/125
2M	FC 62.5/125
2N	FC 50/125
LM	LX.5® 62.5/125
LN	LX.5® 50/125
00	Bare fibre

Monitor Pigtail Length

Output Pigtail Length

Input Pigtail Length
Example (In Metres):
01 = 1 m
10 = 10 m
000 = Adapters only on input, output and monitor ports

Module Style

B	Cross-connect customer premises
D	Dual monitor cross-connect
G	Dual monitor cross-connect
J	Dual monitor
P	Customer premises
R	Single monitor cross-connect

** Contact ADC KRONE for multimode specifications and available split ratios or visit our website at www.adckrone.com.

NG3™ High-Density Fibre Frames

Value-Added Module Systems

Monitor Modules

B Customer Premises Monitor Module

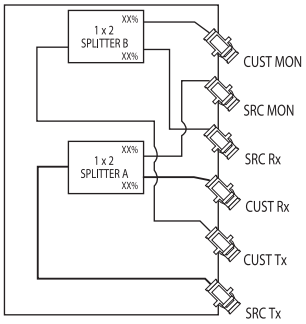

D Dual Monitor Cross-Connect

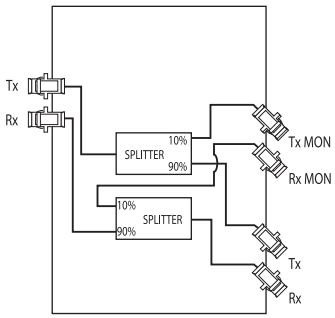

G Dual Monitor Cross-Connect

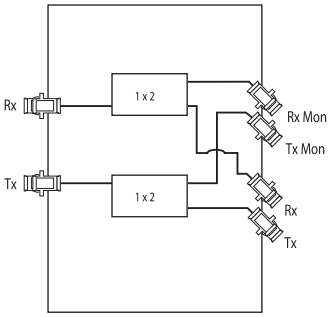

J Dual Monitor Cross-Connect

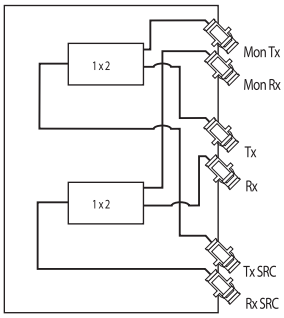

P Customer Premises Monitor Module

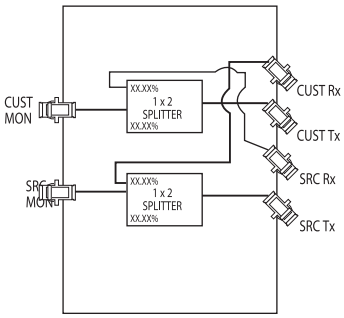

R Single Monitor Cross-Connect

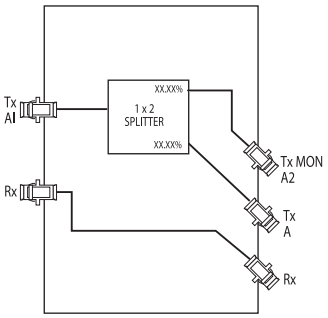

Fibre Connectivity Solutions • 6356_au • 6/07

NG3™ High-Density Fibre Frames
Accessories

End Guard

The end guard provides protection for the fibres entering and exiting frames at the ends of a lineup.

Ordering Information

Description	Catalogue Number
End guard, 2.15m high x 635mm wide x 61mm deep	NG3-EGDTWN7A00
End guard with optional slack storage (for right side of NG3 lineup **only**) 7' high x 8.5" wide x 24" deep	NG3-EGDSTGTWN7A00

Work Shelf

The work shelf can mount at any one of six positions along the height of the frame to provide a surface for miscellaneous objects (i.e. isopropyl alcohol, tissues and cotton swabs for cleaning connectors), to provide a writing surface, or to serve as an aid in field terminating cables and jumpers.

Ordering Information

Description	Catalogue Number
Writing shelf	RWS23

Communications Panel

The communications panel provides a voice line at the fibre frame. It can be mounted on any one of the hinged fibre termination panel mounting positions on the frame.

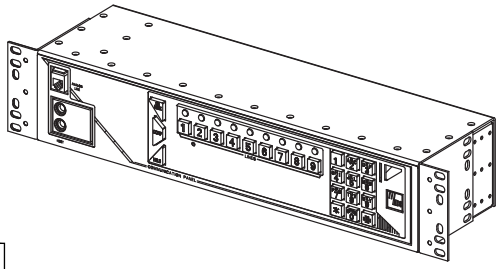

Ordering Information

Description	Catalogue Number
Communications panel	COMP-21
Headset with 3.65m (12') coil cord, Handset with cord	COMP-HDS
	COMP-HNDSKIT
Handset with holder	COMP-HNR-P

NG3™ High-Density Fibre Frames
Accessories

Cable Clamp Kits

Cable clamp kits are available for securing IFC on the rear of the hinged fibre termination panel. Each panel has two cable clamp mounting positions.

Ordering Information

Description	Catalogue Number
Cable clamp kit for IFC, dielectric cable without grounding hardware (included with fibre termination blocks with IFC)	NGF-ACCCLMP08

Rack Extenders

Rack extenders are used to extend the height of a 7-foot (2.14 m) rack to the appropriate ceiling height so that it can be secured overhead.

Ordering Information

Description	Catalogue Number
Rack extender	
12" (30.48cm)	NG3-ACCEXTMFTWN-12
24" (60.96cm)	NG3-ACCEXTMFTWN-24
54" (137.16cm)	NG3-ACCEXTMFTWN-54

Grounding Kits

Ordering Information

Description	Catalogue Number
Grounding wire kit	E-501-L37
H-Tap bounding kit	E-501-L166

AC Outlet Kits

Ordering Information

Description	Catalogue Number
Dual outlet, mounts in base of NG3 frame	ACOK-2
AC outlet cover kit	RAC-0X0493

NG3™ High-Density Fibre Frames

Accessories

Rack Installation Kits

Ordering Information

Description	Catalogue Number
For computer floor	FDF-ACC146
For overhead support	RINST-TOP7-PW
Concrete Floor	RINST-FLR

Isolation Pad

Ordering Information

Description	Catalogue Number
NG3 isolation pad	NG3-ACCISOPMFTWN

OMX™ Optical Distribution Frame

Introduction

Growth in the telecommunications industry has driven widespread deployment of optical fibre. As the number of installed fibres grows, the capability of a service provider's optical distribution frame to handle large amounts of fibre becomes crucial. Also, office floor space is at a premium. Saving floor space by increasing the optical distribution frame density can provide significant cost-savings to the service provider. At the same time, service providers require a flexible optical distribution frame, which enables them to quickly respond to the changing needs of their customers. These key factors have driven the increased demand for a high-density, modular, front access optical distribution frame.

ADC KRONE has developed the OMX™ optical distribution frame to meet these demands. Designed with total front access, the OMX can be installed back-to-back or against a wall to save valuable office floor space. This high-density frame terminates and splices up to 576 fibres in a 600mm x 300mm (ETSI) footprint and 864 fibres in a 800mm x 300mm footprint. The OMX fibre frame protects fibre cable and connections through use of the patented angled adapter/retainers and design features that maintain thecorrect bend radius throughout the frame. Adding signal management and enhancement functions, such as splitters, couplers and wavelength division multiplexers, optimises the value of your fibre network by providing nonintrusive access to the optical signal for monitoring and testing signal integrity.

Features and Benefits

- **Modular solution**
  Provides greater flexibility for a variety of applications
  - *Saves costs by standardising on one flexible solution*
- **High density solution**
  Accommodates up to 576 terminations and splices within 600mm x 300mm footprint and 864 in a 800mm x 300mm footprint
  - *Saves valuable floor space*
- **Total front access frame**
  Allows installation back-to-back or against a wall
  - *Saves valuable floor space*
- **Superior cable management**
  Protects cables and connectors; reduces reconfiguration time
  - *Saves maintenance costs, improves reliability*
- **Completely enclosed and lockable**
  Provides additional fibre protection and security
  - *Improves network reliability through controlled access to fibres*

Fibre Connectivity Solutions • 6356_au • 6/07

OMX™ Optical Distribution Frame

Introduction

The OMX's modular design provides flexibility to meet the specific needs of the service provider. Each solution will be a combination of the following parts.

OMX Frame

The OMX frame is 600mm x 300mm (ETSI) and has ten mounting positions for the termination, splice and jumper storage modules. The OMX 800 frame is 800mm x 300mm and also has ten mounting positions for the termination, splice and jumper storage modules.

OMX Termination Module

The OMX termination modules are available with 72, 96, or 144 adapters. These modules can be ordered with adapters only or preterminated with either intrafacility fibre cable (IFC), outside plant (OSP) cables, or pigtails for ease of installation. The modules are available with SC, FC, ST®, E2000, LC and LX.5® connector/adapter styles.

OMX Splice Module

The OMX splice module provides protection and a mounting location for ADC KRONE's round splice trays. Each splice module is two mounting positions tall and holds 24 splice trays. Each splice tray can house up to 24 splices.

OMX Slack Storage Solutions

The OMX jumper storage module enables storage of fibre-optic jumper slack within an OMX frame. Each jumper storage module is one module position tall. The Interbay Management Panel provides off-frame storage of jumper slack. ADC KRONE recommends the use of 2mm patch cords to maximise the cable management potential of the OMX.

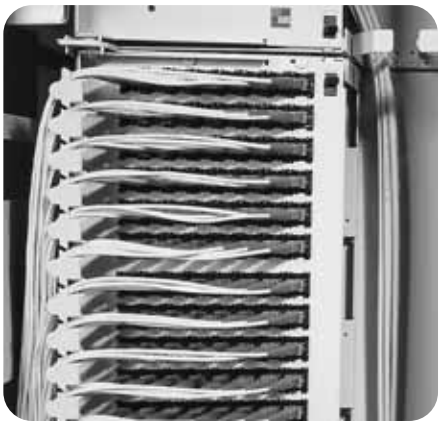

OMX termination module

OMX splice module

OMX slack storage solution

OMX™ Optical Distribution Frame

Frame Section

The OMX frame section provides mounting locations for termination, splice and storage modules. It is a completely front-facing frame; all mounting, maintenance and cable access is done on the front of the frame. A lower trough allows multiple frames to be mounted in a continuous lineup. The frame is shipped with lockable front doors. Preconfigured bays are available; please contact your ADC KRONE representative for ordering information.

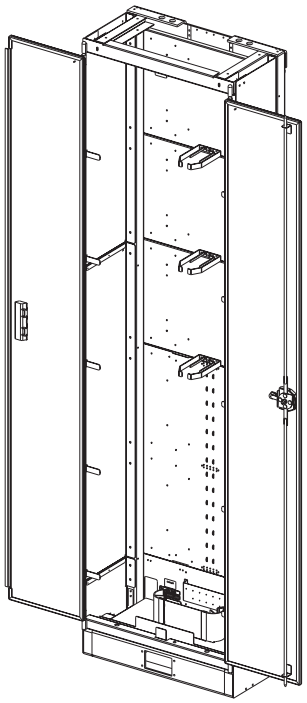

OMX 600 Frame Section
Front ISO View

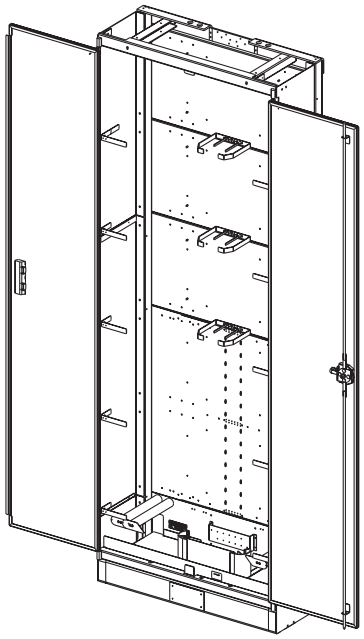

OMX 800 Frame Section
Front ISO View

Ordering Information

Description	Dimensions (HxWxD)	Catalogue Number
OMX 600 frame section	2200mm x 600mm x 300mm	MX6-TSF6030
OMX 800 frame section	2200mm x 800mm x 300mm	MX6-TSF8030

OMX™ Optical Distribution Frame

Termination Module with Adapters Only

The OMX termination module with adapters only is available with 72, 96 or 144 adapters. Modules may be ordered with a "left" orientation (mounts on the left side of the frame) or a "right" orientation (mounts on the right side of the frame). ADC KRONE recommends the use of 2mm patch cords to maximise the cable management potential of the OMX.

Block configuration D can only be mounted in the OMX 800.

72-position

Catalogue Number

MX6-TM ___ ___ ___ 0 0

Block Configuration

A	72-position
B	96-position
C	144-position (LX.5® and LC only)
D	144-position (OMX 800 only)

Block Orientation

L	Left
R	Right

Adapter Type Singlemode

7	SC UPC
8	SC UPC, zirconia sleeve
L	SC 8º APC
L9	SC 9º APC
V	E2000 8º APC
2	FC UPC
3	FC 8º APC
4	ST® UPC
N	LX.5® UPC (144 only)
X	LX.5® APC (144 only)
K	LC UPC (144 only)
S	LC APC (144 only)

OR

Adapter Type Multimode (62.5/125)

9	SC
A	FC
5	ST®
Y	LX.5®
P	LC

OMX™ Optical Distribution Frame

Termination Module with Pigtails

The OMX preterminated pigtail modules are available with either stranded or ribbon preterminated fibre bundles. The modules are mounted on the frame and the fibre bundles are then routed directly to the splice section of the OMX frame. This makes installation of the modules quick and easy, saving valuable installation time. Preterminated pigtail modules may be ordered with a "left" orientation (mounts on the left side of the frame) or a "right" orientation (mounts on the right side of the frame). ADC KRONE recommends the use of 2mm patch cords to maximise the cable management potential of the OMX.
Block configuration D can only be mounted in the OMX 800.

96-position

Catalogue Number

MX6-PM ___ ___ ___ ___ 0___ ___

Block Configuration

A	72-position
B	96-position
C	144-position (LX.5® only)
D	144-position (OMX 800 only)

Connector Type Singlemode

7	SC UPC
8	SC UPC, zirconia sleeve
L	SC 8º APC
L9	SC 9º APC
V	E2000 8º APC
2	FC UPC
3	FC 8º APC
4	ST® UPC
N	LX.5® UPC (144 only)
X	LX.5® APC (144 only)
K	LC UPC (144 only)
S	LC APC (144 only)

OR

Connector Type Multimode (62.5/125)

9	SC
A	FC
5	ST®
Y	LX.5®
P	LC

Number of Pigtail Assemblies

XX	Number of assemblies

Pigtail Assembly Type

1	12-fibre stranded
2	12-fibre stranded Maxi-Strip
3	12-fibre ribbon
4	8-fibre stranded
5	8-fibre ribbon
6	6-fibre ribbon
7	4-fibre ribbon
8	6-fibre stranded

Block Orientation

L	Left
R	Right

OMX™ Optical Distribution Frame

Termination Module with Intrafacility Cable

The OMX preterminated intrafacility cable (IFC) modules are available with either indoor or outdoor rated cable in ribbon, stranded, loose tube, or Maxi-Strip configurations. All modules are 100% factory tested to guarantee continuity and reliable connections. IFC modules make installation quick and easy, reducing labour costs. IFC modules may be ordered with a "left" orientation (mounts on the left side of the frame) or a "right" orientation (mounts on the right side of the frame). ADC KRONE recommends the use of 2mm patch cords to maximise the cable management potential of the OMX.
Block configuration D can only be mounted in the OMX 800.

96-position

Catalogue Number

MX6-FM _ _ _ _ _ _ 0 _ _ _

Length in Metres

Block Configuration

A	72-position
B	96-position
C	144-position (LX.5™ only)
D	144-position (OMX 800 only)

Adapter/Connector #1 Singlemode

7	SC UPC
8	SC UPC, zirconia sleeve
L	SC 8º APC
L9	SC 9º APC
V	E2000 8º APC
2	FC UPC
3	FC 8º APC
4	ST UPC
N	LX.5 UPC (144 only)
X	LX.5 APC (144 only)
K	LC UPC (144 only)
S	LC APC (144 only)

OR

Adapter/Connector #1 Multimode (62.5/125)

9	SC
A	FC
5	ST ®
Y	LX.5™
P	LC

Connector #2 Singlemode

0	No connector/stub end
7	SC UPC
8	SC UPC, zirconia sleeve
L	SC 8º APC
L9	SC 9º APC
V	E2000 8º APC
2	FC UPC
3	FC 8º APC
4	ST UPC
N	LX.5 UPC (144 only)
X	LX.5 APC (144 only)
K	LC UPC (144 only)
S	LC APC (144 only)

OR

Connector #2 Multimode (62.5/125)

0	No connector/stub end
9	SC
A	FC
5	ST ®
Y	LX.5™
P	LC

IFC Type Singlemode (Indoor)

		Glass Type
AA	12-fibre stranded	Corning
BA	24-fibre stranded	Corning
CA	36-fibre stranded	Corning
2A	48-fibre stranded	Corning
7A	54-fibre stranded	Corning
VA	72-fibre stranded	Corning
DA	96-fibre stranded	Corning
FH	144-fibre stranded	Corning
GA	12-fibre ribbon	Sumitomo
HA	24-fibre ribbon	Sumitomo
MA	36-fibre ribbon	Sumitomo
JA	48-fibre ribbon	Sumitomo
KA	72-fibre ribbon	Sumitomo
EG	96-fibre ribbon	Sumitomo
FJ	144-fibre ribbon	Sumitomo
KB	72-fibre ribbon	Alcatel
EF	96-fibre ribbon	Alcatel
FK	144-fibre ribbon	Alcatel
MX	72-fibre stranded Maxi-Strip	Corning
GF	96-fibre stranded Maxi-Strip	Corning

OR

IFC Type Multimode (Indoor)

		Glass Type
AM	12-fibre stranded	Corning
BM	24-fibre stranded	Corning
DM	36-fibre stranded	Corning
2M	48-fibre stranded	Corning
VM	72-fibre stranded	Corning
WM	96-fibre stranded	Corning

Block Orientation

L	Left
R	Right

Contact your ADC KRONE representitve for termination modules with outside plant cable.

OMX™ Optical Distribution Frame

Value-Added Module System Chassis

The OMX VAM chassis is designed to fit into any open chassis location within new or existing OMX 600 optical distribution frames. Each standard chassis can accommodate a maximum of ten VAM plug-in modules, ten bulkhead plates, ten blank plates or any combination thereof. The high density chassis accommodates a maximum of 18 VAM plug-in modules, 18 bulkhead plates, 18 blank plates or any combination thereof.

OMX VAM chassis

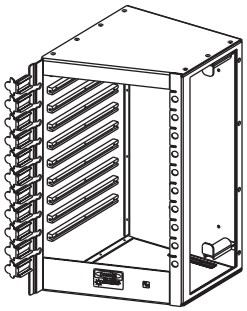

MX6-VAMCHAS-L
Left chassis (unloaded)

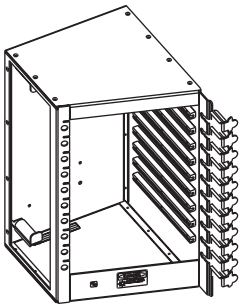

MX6-VAMCHAS-R
Right chassis (unloaded)

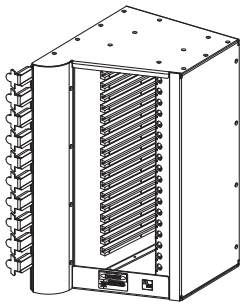

MX6-HDVAMCHAS-L
Left chassis (unloaded)

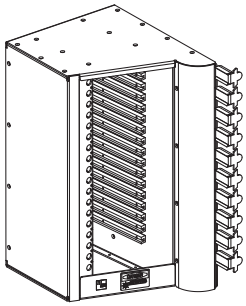

MX6-HDVAMCHAS-R
Right chassis (unloaded)

Ordering Information

Description	Dimensions (HxWxD)	Catalogue Number
Unloaded chassis—left orientation; accommodates up to 10 modules	373mm x 227mm x 286mm	MX6-VAMCHAS-L
Unloaded chassis—right orientation; accommodates up to 10 modules	373mm x 227mm x 286mm	MX6-VAMCHAS-R
Unloaded high density chassis—left orientation; accommodates up to 18 high density modules, **all front access only**	373mm x 227mm x 286mm	MX6-HDVAMCHAS-L
Unloaded high density chassis—right orientation; accommodates up to 18 high density modules, **all front access only**	373mm x 227mm x 286mm	MX6-HDVAMCHAS-R

OMX™ Optical Distribution Frame

Value-Added Modules

Splitter Module

Catalogue Number

Chassis Type

MXV	Standard
MXM	High density

Module Option

2	Input front, output front
3	Input front, output rear
5	Input rear, output front

Input Connector/Adapter

Output Connector/Adapter

Singlemode	
7U	SC UPC
7A	SC 8° APC
7K	SC 9° APC
8A	E2000 8° APC
2U	FC UPC
2A	FC 8° APC
4U	ST® UPC
LU	LX.5® UPC
LA	LX.5® APC
KU	LC UPC
KA	LC APC
00	Bare fibre
Multimode[2]	
9A	SC 50/125
9B	SC 62.5/125
2M	FC 62.5/125
2N	FC 50/125
LM	LX.5® 62.5/125
LN	LX.5® 50/125
5F	ST® 50/125
5U	ST® 62.5/125
00	Bare fibre

[2] Standard multimode couplers are for use with LED source only

Split Ratio (%)

2000	1x2	50/50
2100	1x2	55/45
2200	1x2	60/40
2400	1x2	70/30
2600	1x2	80/20
2800	1x2	90/10
2900	1x2	95/5
3900	1x3	33/33/33
4900	1x4	25/25/25/25
5300	1x5	20/20/20/20/20
6000	1x6	16.6/16.6/16.6/ 16.6/16.6/16.6
8000	1x8	12.5/12.5/...12.5
G116	1x16	6.25/6.25/...6.25

Splitter Type

LEAVE BLANK	Wideband 1310 and 1550nm
G	1310nm wavelength flattened
J	1550nm wavelength flattened
M	Multimode couplers—optimised for use with laser or LED sources

Output Pigtail Length

Input Pigtail Length
Example (In Metres):
01 = 1m
10 = 10m
00 = Adapters only on input and output ports

Number of Splitters

A	Single splitter
B	Dual (2) splitter
C	Triple (3) splitter
D	Quad (4) splitter
E	Five (5) splitters
F	Six (6) splitters

This chart shows the many options available for WDM modules. For assistance in configuring the module appropriate for your application, please contact ADC KRONE.

Contact ADC KRONE for specifications.

Connectorised Example

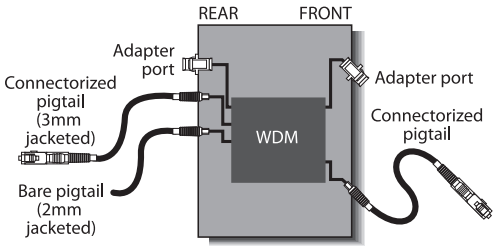

OMX™ Optical Distribution Frame

Value-Added Modules

Splitter Module

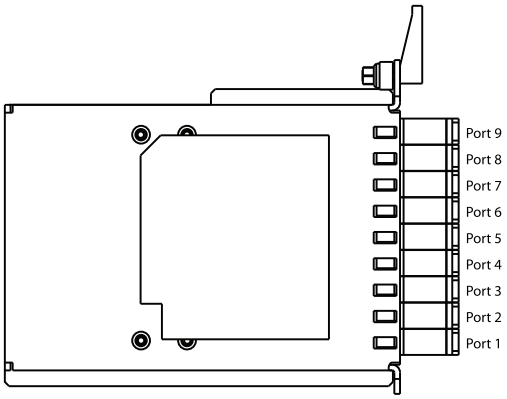

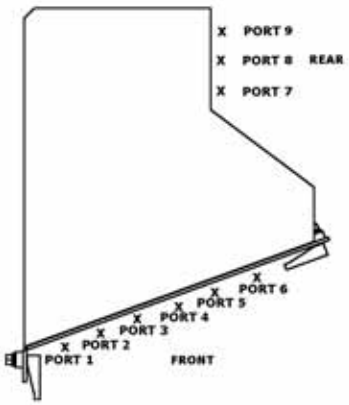

MXM (OMX™ high-density VAM)
Available ports:
- 9 front

MXV (OMX™ standard VAM)
Available ports:
- 6 front
- 3 rear

Module Options

2 Input Front, Output Front

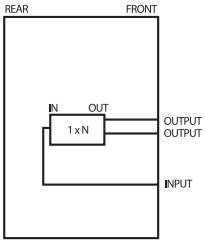

3 Input Front, Output Rear

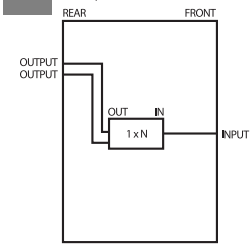

5 Input Rear, Output Front

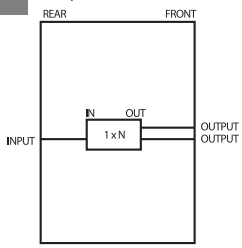

OMX™ Optical Distribution Frame

Value-Added Modules

Wavelength Division Multiplexer (WDM) Module

Catalogue Number

____ - __ __ __ __ __ __ __ ___ ___ - __

Chassis Type

MXV-W	Standard
MXM-W	High Density

Configuration

2	MUX front, DEMUX front
3	MUX front, DEMUX rear
5	MUX rear, DEMUX front

MUX Port Connector/Adapter

7U	SC UPC
7A	SC 8° APC
7K	SC 9° APC
8A	E2000 8° APC
2U	FC UPC
2A	FC 8° APC
4U	ST® UPC
LU	LX.5® UPC
LA	LX.5® APC
KU	LC UPC
KA	LC APC
00	Bare fibre

DEMUX Port Connector/Adapter

7U	SC UPC
7A	SC 8° APC
7K	SC 9° APC
8A	E2000 8° APC
2U	FC UPC
2A	FC 8° APC
4U	ST® UPC
LU	LX.5® UPC
LA	LX.5® APC
KU	LC UPC
KA	LC APC
00	Bare fibre

Module Configuration

A	Single
B	Dual
C	Triple

Isolation

1	Standard
2	High
3	Very high

WDM Type (λ_1, λ_2)

A	Unidirectional multiplexer
C	Unidirectional demultiplexer
E	Bidirectional λ_1 Tx/λ_2 Rx
G	Bidirectional λ_1 Rx/λ_2 Tx
J	45dB isolation, pass 1310
K	45dB isolation, pass 1550
L	(Dual only) unidirectional multiplexer, unidirectional demultiplexer [1]
M	(Dual only) bidirectional λ_1 Tx/λ_2 Rx, bidirectional λ_2 Tx/λ_1 Rx

[1] WDM Type "L" includes (1) unidirectional multiplexer (standard isolation) and (1) unidirectional demultiplexer (isolation specified by next character)

Isolation

LEAVE BLANK	Putty
B	Black

Demux Port Pigtail Length

Mux Port Pigtail Length

Example (In Metres):
01 = 1m
10 = 10m
00 = Adapters only on mux and demux ports

Wavelength

A	1310 (λ_1)/1550(λ_2)
B	1533 (λ_1)/1557(λ_2)
C	1310/1533/1557
E	1550 (λ_1)/1625(λ_2)
F	1310 (λ_1)/1625(λ_2)

Connectorised Example

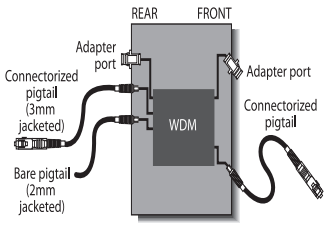

This chart shows the many options available for WDM modules. For assistance in configuring the module appropriate for your application, please contact ADC KRONE.
Contact ADC KRONE for specifications.

In the ordering charts, the abbreviation "mux" references the multiplexed side of the WDM, the side where two optical signals coexist on one fibre. The abbreviation "demux" references the demultiplexed side of the WDM, the side where each signal appears on its own fibre. Both unidirectional and bidirectional WDMs are available as shown below.

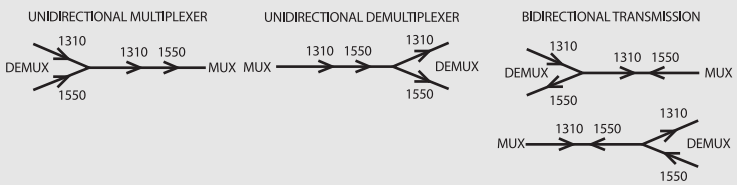

OMX™ Optical Distribution Frame

Value-Added Module System

Wavelength Division Multiplexer (WDM)

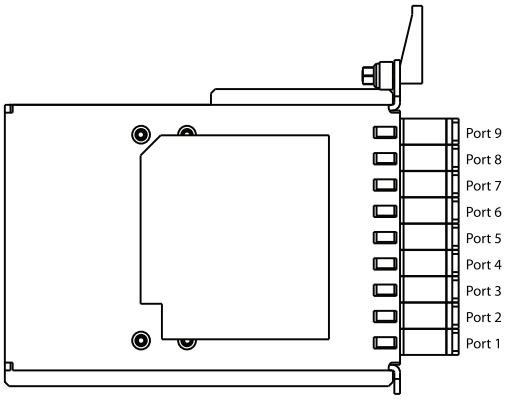

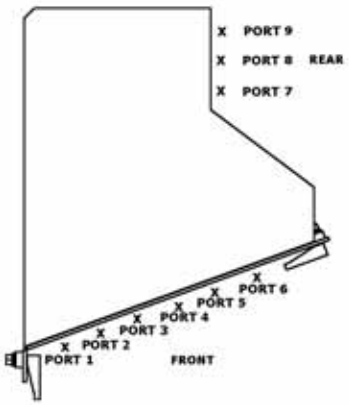

MXM-W (OMX™ high-density VAM)
Available ports:
- 9 front

MXV-W (OMX™ standard VAM)
Available ports:
- 6 front
- 3 rear

WDM Configurations

2

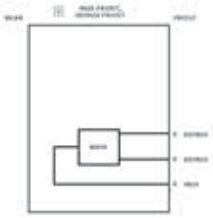

3

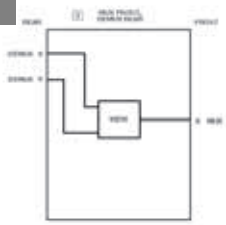

5

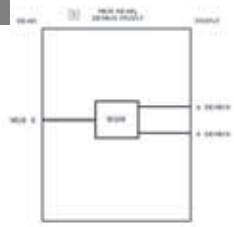

WDM Types

A

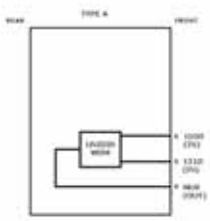

C

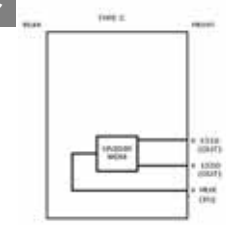

E

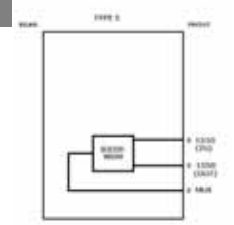

G

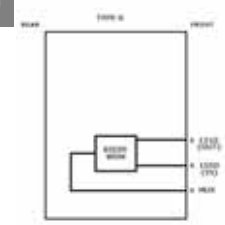

J

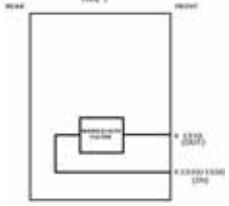

K

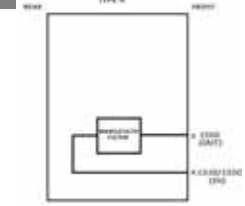

L

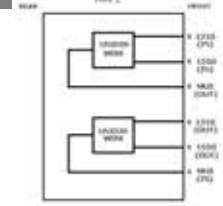

M

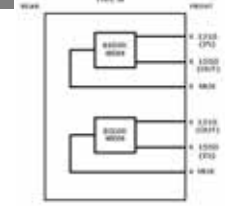

OMX™ Optical Distribution Frame

Value-Added Modules

Monitor Module

Catalogue Number

Chassis Type

MXV-M	Standard
MXM-M	High Density

Input Connector/Adapter

Output Connector/Adapter

Monitor Connector/Adapter

Singlemode	
7U	SC UPC
7A	SC 8° APC
7K	SC 9° APC
8A	E2000 8° APC
2U	FC UPC
2A	FC 8° APC
4U	ST® UPC
LU	LX.5® UPC
LA	LX.5® APC
KU	LC UPC
KA	LC APC
00	Bare fibre
Multimode	
9A	SC 50/125
9B	SC 62.5/125
2M	FC 62.5/125
2N	FC 50/125
LM	LX.5® 62.5/125
LN	LX.5® 50/125
5F	ST® 50/125
5U	ST® 62.5/125
00	Bare fibre

Split Ratio (%)

K	99/1
B	95/5
A	90/10
E	80/20
H	70/30
J	60/40
L	50/50

Number of Circuits per VAM

1	1 circuit
2	2 circuits
3	3 circuits

Number of circuits is dependent on module type

Monitor Pigtail Length

Output Pigtail Length

Input Pigtail Length

Example (in Metres):
01 = 1m
10 = 10m
00 = Adapters only on input and output ports

Module Style

J	Dual monitor
B	Cross-connect customer premises
D	Dual monitor cross-connect
G	Dual monitor cross-connect
P	Customer premises
R	Single monitor cross-connect
C	Customer premises monitor module

This chart shows the many options available for WDM modules. For assistance in configuring the module appropriate for your application, please contact ADC KRONE.

Contact ADC KRONE for specifications.

OMX™ Optical Distribution Frame

Value-Added Modules

Monitor Module

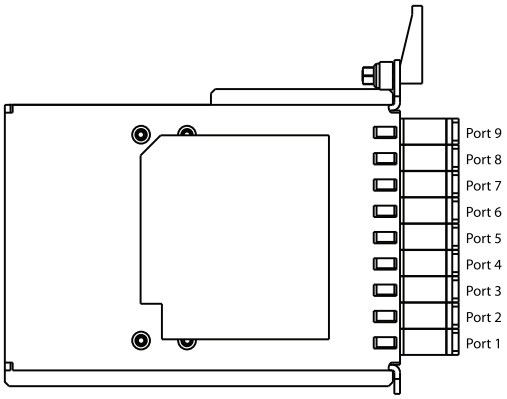

MXM-M (OMX™ high-density VAM)
Available ports:
- 9 front

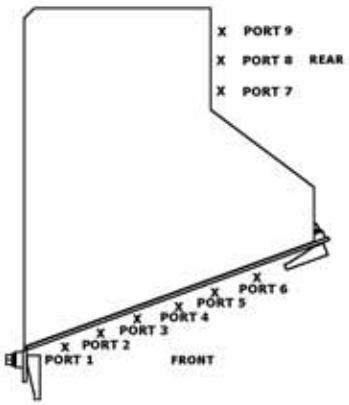

MXV-W (OMX™ standard VAM)
Available ports:
- 6 front
- 3 rear

Monitor Modules

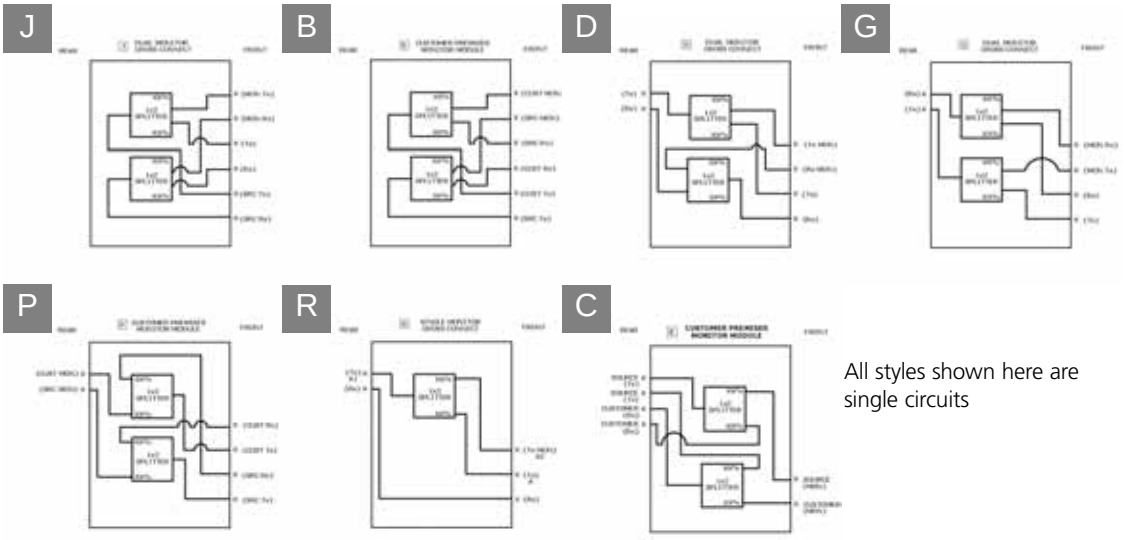

All styles shown here are single circuits

OMX™ Optical Distribution Frame

Splice Module and Splice Tray

Splice Module

The OMX splice module provides mounting positions and protection for 24 splice trays. The splice module is the height of two termination modules. The module may be ordered with a "left" orientation (mounts on the left side of the frame) or a "right" orientation (mounts on the right side of the frame). Splice modules must be mounted to the frame starting in the bottom position.

Ordering Information

Description	Catalogue Number
OMX (24) tray splice module Height = 2 module positions Right orientation Left orientation	 MX6-24SPNL-R MX6-24SPNL-L

Splice Tray

The round splice tray used in the OMX simplifies installation and maintenance. The tray stores up to three metres of slack allowing the installer to roll the tray away from the frame to perform splicing.

Catalogue Number

FST-DRS __ __ - __ __

Number of Splices

12
16
24
32[1]

[1]For 8 fibre ribbon only

Splice Type

00	Empty
FT	Bare fusion
HS	Heat shrink fusion
MT	Mechanical (elastomeric)
URCM	Universal Raychem
NT	Nortel QPAK
ANT	Crimp (sandwich)
RT	Rotary
3M	FibrLok®

OMX™ Optical Distribution Frame
Accessories

OMX Jumper Storage Module

The OMX jumper slack storage module provides for jumper storage functionality within the frame. Up to five jumper storage modules can be mounted on one side of an OMX frame. Jumper storage modules must be mounted to the frame starting in the bottom position.

Ordering Information

Description	Catalogue Number
OMX 600 jumper storage module (OMX 600 only)	MX6-JSM00000
OMX 800 jumper storage module (OMX 800 only)	MX6-JSM80000

OMX Interbay Management Panel

The OMX interbay management panel provides slack storage between frames for interconnect or cross-connect jumpers. **The interbay management panel is necessary when no jumper storage is provided on the OMX frame itself.**

Ordering Information

Description	Dimensions (HxWxD)	Catalogue Number
150mm OMX interbay management panel	2200mm x 150mm x 300mm	MX6-IMP150
200mm OMX interbay management panel	2200mm x 200mm x 300mm	MX6-IMP200

OMX End Guard

The OMX end guard provides protection for the fibres entering and exiting frames at the ends of a lineup. The end guard attaches directly to the interbay management panel, but does not add to the overall frame width. **End guards are not required when ordering splice bays or bays without external interbay management panels.** The OMX end guard can be mounted to both the OMX 600 and OMX 800.

Ordering Information

Description	Dimensions (HxD)	Catalogue Number
OMX end guard	2200mm x 300mm	MX6-ENDGRD

OMX™ Optical Distribution Frame
Accessories

OMX Outside Plant Cable Clamp

The OMX cable clamp is used to secure the OSP/intrafacility cable to the base or top of the frame.

Ordering Information

Description	Catalogue Number
OMX outside plant cable clamp for **top entry cables**; clamps up to 3 cables	OSP-CLPFEC-LG
OMX outside plant cable clamp for **underfloor cable entry**	MX6-ACC001

Rack Installation Kits

Ordering Information

Description	Catalogue Number
Rack installation kit for concrete floor, kit includes: (2) M8 bolts, 90mm (4) M8 nuts (8) flat washers (4) lock washers shims and anchor plates	RAC-MX0616
Rack installation kit for raised floor, kit includes: (4) threaded rods M12 x 1m (12) heavy nuts, lock and flat washers (4) nuts with springs, M12 (2) 1.8m unistrut (1) anchor kit	RAC-MX0615

OMX™ Optical Distribution Frame

Splice Bay

The OMX 600 splice bay is a high-density splice solution, housing up to 1440 splices within a 600mm x 300mm (ETSI) footprint. Shipped complete with the necessary cable management, the splice bay features slots which secure and protect the round splice trays. The splice bay can hold up to sixty 12-fibre splice trays on each vertical. The bay may be ordered for applications in which the cables enter from above or below. The OMX 600 splice bay is shipped with lockable front doors.

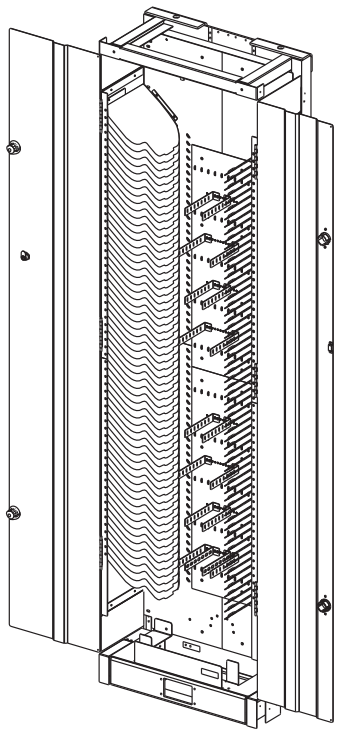

Front ISO View

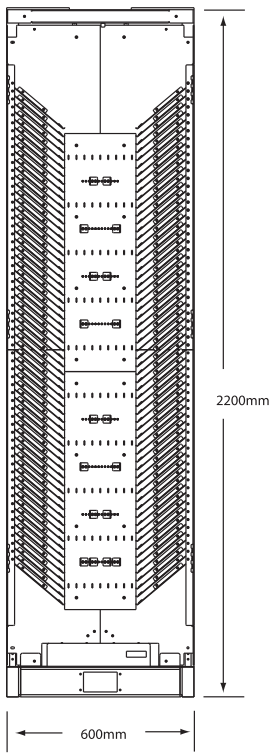

Front View

MX6-SPL6030-1440-D Shown

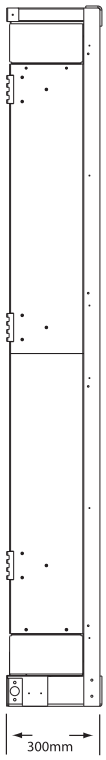

Side View

Ordering Information

Description	Dimensions (HxWxD)	Catalogue Number
Fully configured splice bay; accommodates up to 1440 splices	2200mm x 600mm x 300mm	
Cable enters from **underfloor**		MX6-SPL6030-1440-D
Cable enters from **top**		MX6-SPL6030-1440-U
Splice bay cable clamps		
For OSP cable	(maximum cable outer diametre: 10mm to 28mm)	FEC-ACCCLMP01
For IFC cable	(maximum cable outer diametre: 12.7mm to 25.4mm)	MX6-SPLIFCCLMP

To order splice trays, see page 3.65

Fibre Distribution Frame

Introduction

ADC KRONE has designed a family of Fibre Distribution Frame (FDF) products utilising its expertise in cable management. In designing the FDF, ADC KRONE stressed modularity and flexibility. The end result is a product family well-suited for today's fibre network and capable of accommodating future growth.

ADC KRONE is a market-leading supplier and low cost producer of fibre access, termination, and connectivity products designed to provide a full range of solutions for optical networks. Today's unprecedented growth and widespread deployment of fibre has made cable management a critical element for building robust and reliable networks. Able to grow from one fibre to thousands of fibres without sacrificing space, function or cable management protection, the FDF is a critical component of today's optical network.

ADC KRONE uses its expertise in cable management to develop innovative products that ensure bend radius protection at every point in the network. Innovative fibre frames, clear routing paths, slack storage solutions, and optical components all optimise the value of your optical network.

End-to-End System Connectivity

ADC KRONE has some real advantages to offer our customers. We provide all the equipment and optical components to connect from the outside plant fibre all the way to the station outlet.

With the introduction of video, coherent systems and very high bit rates, should you build your fibre infrastructure with anything less?

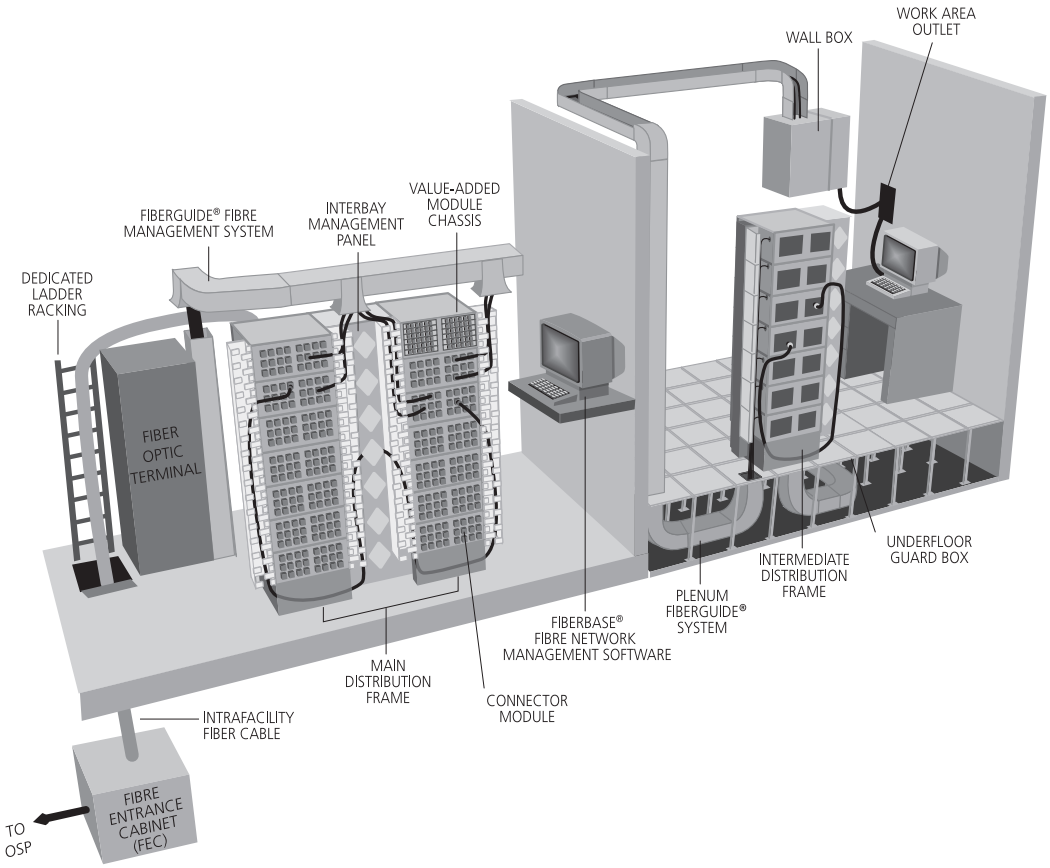

Rear Load Frames

How To Order A Rear Load Frame

When fibre products are ordered with a factory terminated intrafacility fibre cable (IFC), they must be ordered as individual line items and shipped separately from the bay. Other modules specified can be assembled with the bay.

Rear load bays are typically used in cross-connect applications in which splicing is done in the vault or a designated off-frame splice area.

Main Components of the Rear Load FDF

1 **Select the desired bay based on height.**

2 **Select the desired rear load modules**
Connector Modules: Available in 72, 96, 144-position and a 12-pack plug-in configuration. These modules can be ordered loaded with adapters only or with pre-terminated IFC. The 72-position module is recommended for most applications. Connector modules with IFC can be ordered with IFC oriented for underfloor routing.

Storage Modules: Used to store jumpers when 5" bay spacing is not available (storage modules are not mandatory when the interbay management panel is used).

Value-Added Modules (VAM): 12-position VAMs are available for rear load style frames and house VAM plug-ins. The rear load style VAM chassis holds up to 12 single VAM plug-ins.

All rear load style modules come standard with 20.32 cm (8") rear doors and rear cable management attached at the factory.

NOTE: For applications in which splicing will be done in the FDF, front load frames are recommended.

3 **Interbay management panels** *(ordered and shipped as separate line items)*
The interbay management panel mounts between bays in the same manner as a 12.7cm (5") bay spacer. This panel is optional but is **recommended for all applications** of the frame. An interbay panel should be mounted on each side of a fibre frame. For underfloor cabling/raised floor applications, an underfloor guard box is required.

Optional Equipment

4 **End guards** *(ordered and shipped as separate line item).*

5 **Blank panels**
As necessary for unused positions.

6 **Cable clamps** *(ordered and shipped as separate line item)*
One cable clamp is required for each multifibre cable brought into the bay. Rear load connector modules with IFC include a cable clamp.

7 **Communication panels**
If a communication panel is desired, it will occupy one module location in the bay.

Introduction

Rear Load Fibre Distribution Frame

The Rear Load FDF was developed with the advent of pre-terminated connector modules with intrafacility fibre cable. Rear Load FDFs are primarily used in off-frame splicing applications in which the splicing function is away from the fibre frame. Rear Load modules are designed for use only in ADC KRONE Rear Load 23-inch network unequal flange racks.

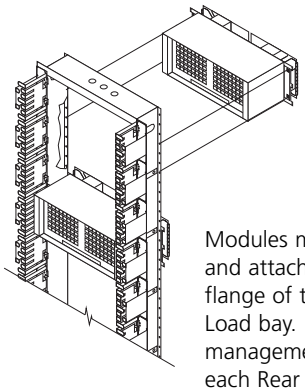

Modules mount from the rear and attach to the smaller rear flange of the universal Rear Load bay. Rear cable management is included with each Rear Load module.

Rear Load FDF Features

- Cable management hardware, consisting of front vertical cable guides and a lower 14" horizontal cable trough are installed on the frame at the factory
- Rear cable management hardware and doors are included as part of the Rear Load module
- All modules mount from the rear of the bay and mount to the bay's small rear flange
- Modules can be ordered with factory terminated IFC or OSP cable

Network Style Unequal Flange Bay

- Can be used in either cross-connect or interconnect applications
- Up to 1152 terminations in a 7' bay
- 14" bottom trough accommodates jumper slack and provides horizontal jumper raceway

Connector Modules *without* IFC

- Used to provide terminations for FOT jumpers or equipment jumpers in a Rear Load frame
- 72 fibre capacity: supports all industry standard simplex adapter types
- 96 fibre capacity: supports all industry standard simplex adapter types
- 144 fibre capacity using ADC KRONE's LX.5® adapter

Connector Modules *with* IFC

- Includes IFC pre-terminated at the factory and shipped on a reel (stub mounts on right side, rear of panel unless ordered differently)
- 72 fibre capacity: supports all industry standard simplex adapter types
- 72 fibre capacity: ADC KRONE 12-pack termination plug-ins available with pigtails or IFC
- 96 fibre capacity: supports all industry standard simplex adapter types
- 144 fibre capacity using ADC KRONE's LX.5® adapter

Value-Added Module (VAM)

- Provides an organised platform for deploying optical components such as splitters, WDMs, optical switches, etc.
- Accepts 12 six-position bulkhead plates or 12 single VAM plug-ins

Slack Storage Modules

- With cable management trays (CMTs): 36 fibres, 8-10 metres (26.23' - 32.79') storage per CMT
- With fibre storage disk: 48 fibres, 3-4 metres (9.84' - 13.12') per disk

Splice Modules

- Supports 192 fibres when splicing individual fibres
- Supports 384 fibres when mass fusion splicing ribbon fibres
- 8 drawers, 2 single trays per drawer, 12 splices per tray

Rear Load Fibre Distribution Frames

Configuration and Order Form

This page may be copied and used to configure a rear load frame. The configuration drawing may then be attached to an order.

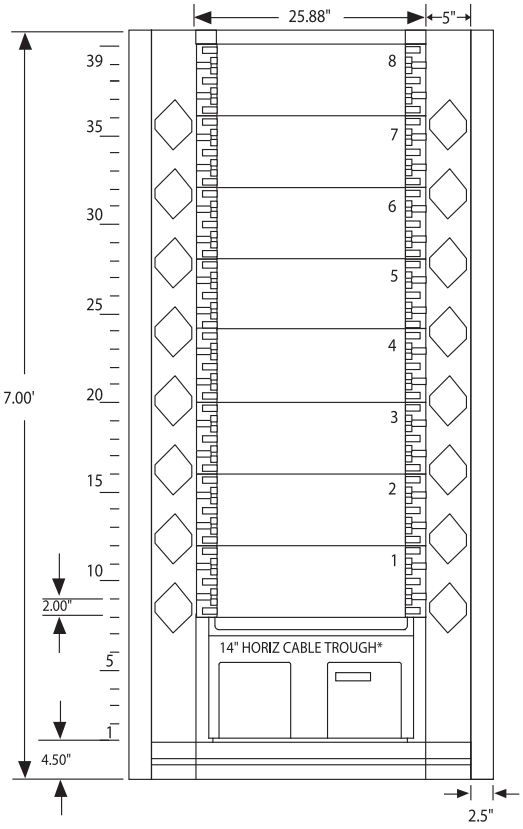

Interbay management panels and end guards shown here are ordered and shipped separately. Write the catalogue numbers for the modules in each location on the drawing.

Pre-terminated rear load modules are shipped separately from the bay.

14-inch lower troughs are recommended for most applications; however, other lower troughs are available.

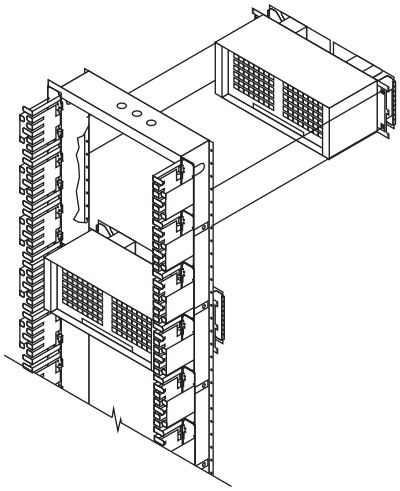

	Catalogue Number	Quantity
Bay	_____	_____
Modules	Write catalogue number in each location on drawing above	
Interbay management panel	_____	_____
Optional Equipment		
End guards	_____	_____
Blank panel	_____	_____
Cable clamps	_____	_____
Communication panel	_____	_____
Fibre optic patch cords	Order on separate form	
FiberGuide® Fibre Management System	Order on separate form	

Special Configuration Instructions
(Example: AC outlet)

Rear Load Frames

Rear Load Fibre Distribution Frame with 14-Inch (35.56 cm) Trough

Recommended Bay Style

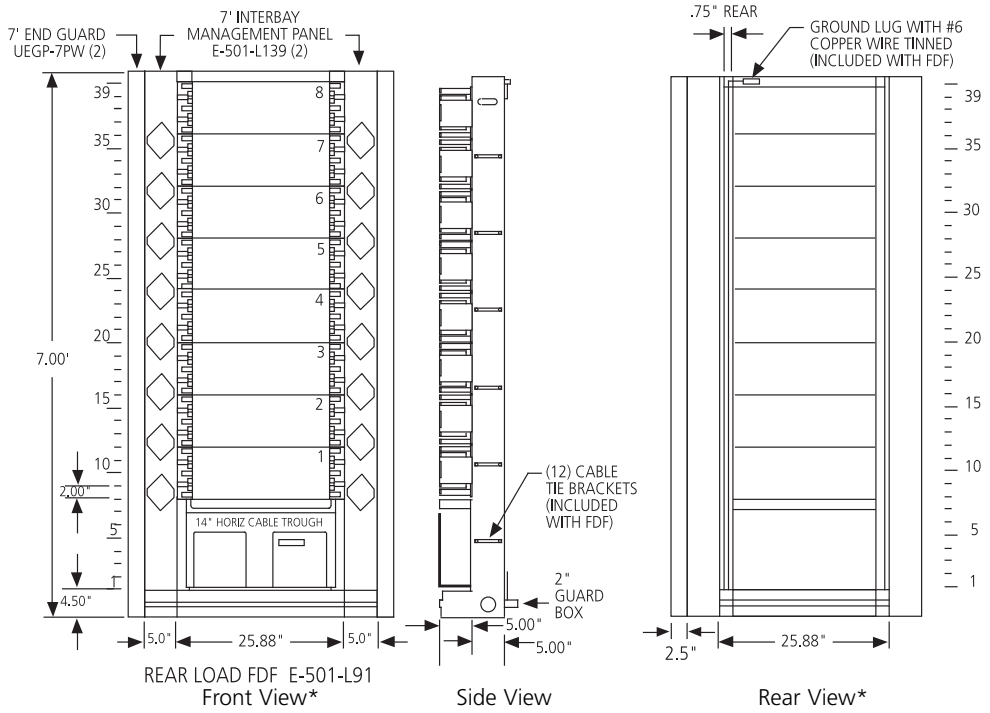

*Interbay management panels and end guards shown are for reference only. They are ordered separately.

- Rear load bays are recommended for applications when splicing is done in the vault or at an off-frame splice area
- Up to eight 8-inch (20.31 cm) modules can be installed in one rear load bay
- 7-foot (2.14 m) bay supports up to 1152 terminations
- Rear Load FDFs include unequal flange network type (4.5-inch guard box) rack, 14-inch lower horizontal cable trough, front vertical cable guides, ground wire kit and cable tie brackets
- All rear load modules are equipped with rear fanning triangles and 8-inch (20.32 cm) rear doors

Ordering Information

Description	Dimensions (HxWxD)	Catalogue Number
Network Style Unequal Flange Rear Load Bay with 14" (35.56 cm) Trough		
7' (2.14m)	7' x 26" x 12" (2.14m x 66.04cm x 30.48cm)	E-501-L91
9' (2.76m)	9' x 26" x 12" (2.76m x 66.04cm x 30.48cm)	E-501-L92
11.5' (3.51m)	11.5' x 26" x 12" (3.52m x 66.04cm x 30.48cm)	E-501-L93

For existing lineups with 6", 8" or 16" lower cable troughs, call ADC KRONE.

Rear Load Frame Hardware

Rack Installation Kits

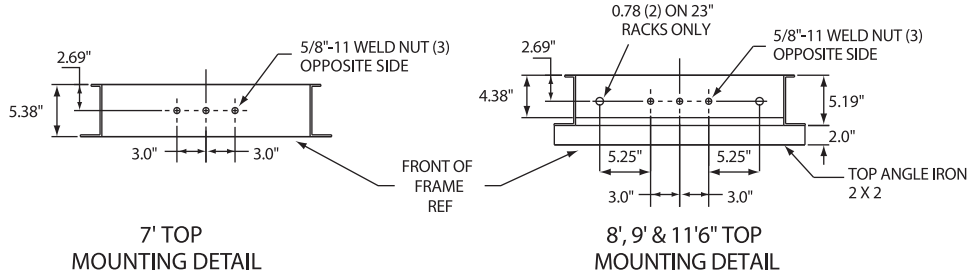

7' TOP MOUNTING DETAIL

8', 9' & 11'6" TOP MOUNTING DETAIL

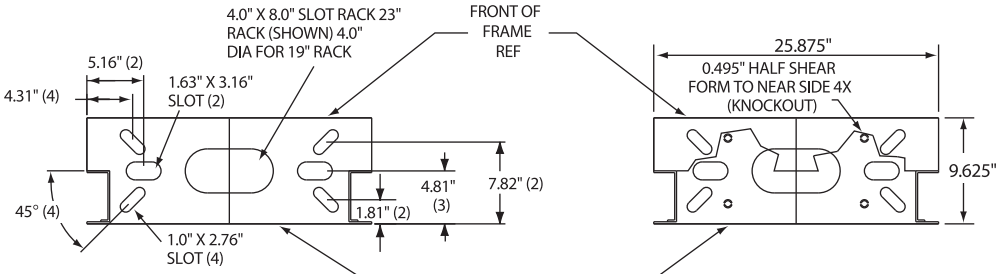

BOTTOM VIEW BASE MOUNTING DETAIL 7', 8', 9', 11'6"

TOP VIEW BASE MOUNTING DETAIL 7', 8', 9', 11'6"

Network Type Unequal Flange Rack Mounting Details

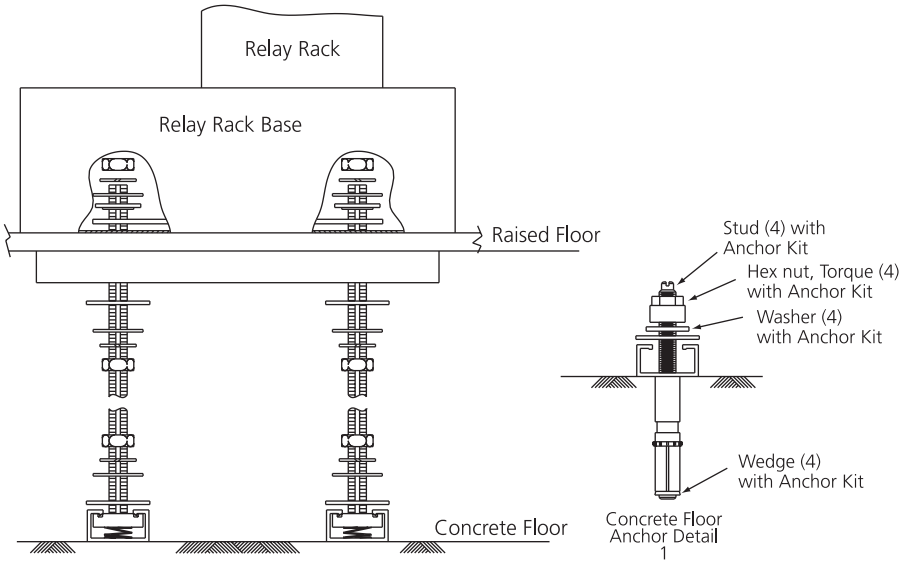

Underfloor Mounting Kit

Ordering information follows on the next page.

Rear Load Frame Hardware

Rack Installation Kits

Rack installation kits may be used on network racks and are rated to Earthquake Zone 4 areas.

Ordering Information

Description	Catalogue Number
Rack installation kit for 7' racks, includes: - (1) floor mounting kit - (1) top attachment kit for 7' racks - (12) rack tie brackets kits - (1) rack ground kit for 7' racks	RINST-DSX7-PW
Rack installation kit for 9' and 11' 6" racks, includes: - (1) floor mounting kit - (1) top attachment kit for 9' and 11' 6" racks - (22) rack tie brackets kits - (1) rack ground kit for 9' and 11' 6" racks	RINST-DSX9-PW
Universal anchor kit, for all UEF Racks includes: - (4) anchor assemblies - (2) universal hold down bars - (8) anchor plate washers - (8) shim plates .063 - (4) shim plates .125	RINST-FLR
5/8" Raised Floor Mounting Kit - (4) threaded rods 5/8" - 11" x 12" - (12) heavy nuts, locks and flat washers - (4) nuts with springs 1/2" x 13", and shoulder washers - (1) 10' unistrut and anchor kit	FDF-ACC146
5/8" Raised Floor Mounting Kit - (4) threaded rods 5/8" - 11" x 30" - (12) heavy nuts, locks and flat washers - (4) nuts with springs 5/8" x 11", and shoulder washers - (1) 10' unistrut - (1) RINST-FLR universal anchor kit	FDF-ACC238
1/2" Raised Floor Mounting Kit, 30" Threaded Rod - (4) threaded rods 1/2" - 13" x 30" - (12) heavy nuts, locks and flat washers - (4) nuts with springs 1/2" x 13", and shoulder washers - (1) 10' unistrut and anchor kit	FDF-ACC136
1/2" Raised Floor Mounting Kit, 42" Threaded Rod - (4) threaded rods 1/2" - 13" x 42" - (12) heavy nuts, locks and flat washers - (4) nuts with springs 1/2" x 13", and shoulder washers - (1) 10' unistrut and anchor kit	FDF-ACC198

Rear Load Frame Hardware

Interbay Management Panel

- Provides storage between the bays for cross-connect jumpers
- Available for 7, 9- or 11.5-foot (2.14, 2.75, 3.51 m) bays
- Trough filler insert protects the fibre in the lower trough between bays
- Includes a lower guard box and five-inch trough filler insert
- To provide space for these panels, all bays must be spaced 12.7cm 5 inches apart

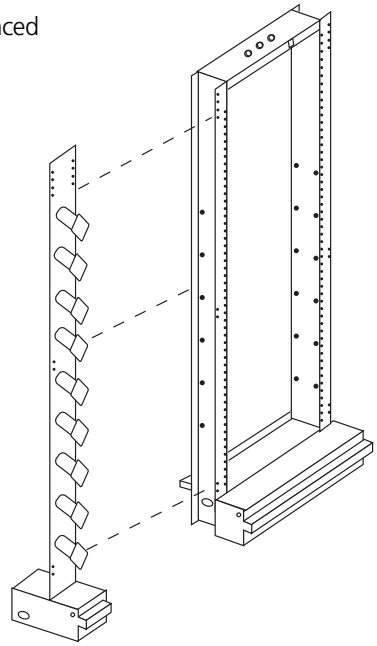

Ordering Information

Description	Dimensions (HxWxD)	Catalogue Number
Universal interbay management panel *Includes trough filler insert and lower 5" (12.7 cm) guard box*		
Use with 14" [35.56 cm] trough ***only***		
7' H (2.14m)	7' x 5" (2.14m x 12.7cm)	E-501-L139
9' H (2.75m)	9' x 5" (2.76m x 12.7cm)	E-501-L142
11.5' H (3.51m)	11.5' x 5" (3.52m x 12.7cm)	E-501-L143
Optional covers for interbay management panels		
7' H x 5" W (2.14m x 12.7cm)		E-501-L409

Optional cover kits are available for 14" lower troughs.
For existing lineups with 6", 8" or 16" lower cable troughs, call ADC KRONE.

Rear Load Frame Hardware

Guard Boxes – Underfloor

Ordering Information

Description	Dimensions (HxWxD)	Catalogue Number
Underfloor guard boxes Rear access only. Used for routing OSP or IFC cable or patch cords from under floor to the rear of the bay.	3.94" x 4.88" x 4.9" (10 x 12.4 x 12.45cm)	FDF-ACC139
Front and rear access. Used for routing OSP, IFC or patch cords from under floor to the rear of the bay and patch cords from under floor to the front of the bay.	7.05" x 8.6" x 5" (17.9 x 21.84 x 12.7cm)	FDF-ACC152

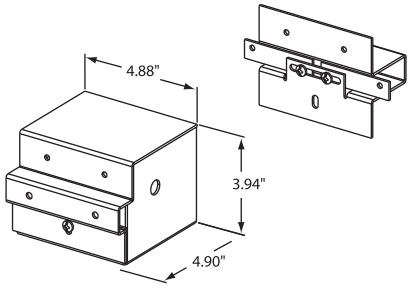

FDF-ACC139
Rear Access Underfloor Guard Box
(Front View)

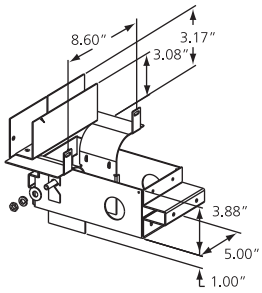

FDF-ACC152
Front/Rear Access Underfloor Guard Box
(Rear View)

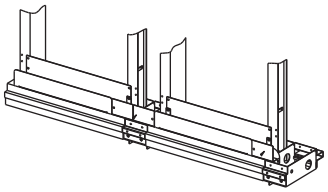

FDF-ACC152
Shown Installed Between Network Racks
and at end of lineup
(Front View)

Rear Load Frame Hardware

Rear Fibre Storage Panel

- Provides cable management and service loop storage of fibre optic patch cords typically routed between an ADC KRONE fibre distribution frame (FDF) and the fibre optic terminal (FOT) equipment
- Kit contains one storage panel with spools and mounting hardware to secure the panel to the frame
- Can be installed in existing lineups
- Mounts on either left or right duct area of FDF
- Attaches to 7, 9 or 11.5-foot frames
- ADC KRONE recommends storing excess patch cord slack at the FOT to distribute the slack to multiple locations throughout the central office/headend.
- Cannot be mounted onto the frame if any cable clamps are present on that side of the frame.

Ordering Information

Description	Catalogue Number
Rear fibre distribution frame storage panel kit Includes one storage panel, with spools and mounting hardware	FDF-RFSP

End Guards

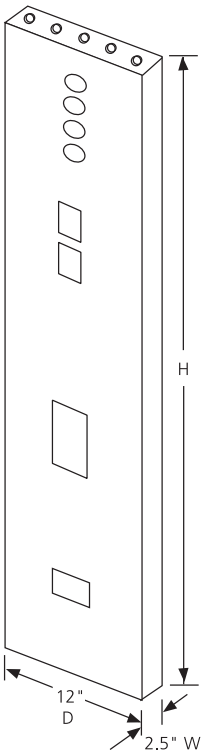

- Attaches to either a bay or interbay management panel
- Serves as a mounting place for outlets and switches
- Used interchangeably for either left or right applications
- Provides protection and a finished appearance at the start and end of bay lineups

Ordering Information

Description	Catalogue Number
Network bay end guard panel *Mounts on IMP or bay*	
2.5" W (6.35cm) and:	
7' H (2.14m) x 12" D	UEGP-7PW
9' H (2.75m) x 12" D	UEGP-9PW
11.5' H (3.51m) x 12" D	UEGP-115PW

Rear Load Frame Connector Modules

Connector Module — 72 or 96-Termination

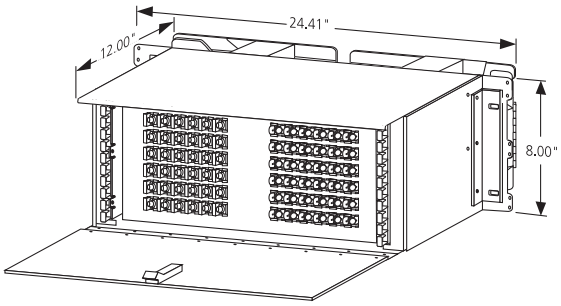

72 Connector Module for Rear Load Frames

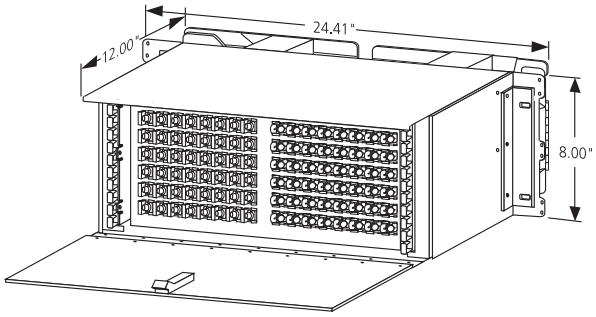

96 Connector Module for Rear Load Frames

- All rear load modules come with rear doors and cable management attached
- Module contains removable angled retainers; angled toward left and right side, ensuring minimum bend radius
- Retainers designed for easy removal without use of tool; allows easy access to back of the adapter/receptacle from front of bay
- Fanning strips maintain 3.81cm (1.5") bend radius, provide organisation, hold fibres in place at point of entry to the module
- Removable transparent, smoked plastic cover encloses front of module; protects fibres and connectors from disturbance
- Designation card, identifying each cable, is visible when cover is opened or closed
- Designed to be mounted in an ADC KRONE rear load frame equipped with cable management hardware
- An accessory mounting kit is required when installing a rear load module into a plain, 23-inch WECO drilled, unequal flange rack (Non-ADC KRONE front load frame).

Ordering information appears on following page.

Rear Load Frame Connector Modules

Connector Module — 72, 96 or 144-Termination

Ordering Information

Number of Terminations	Adapter Type	Numbered	Catalogue Number
72	Singlemode SC	Vertically	FCM-670000
	Angled polish SC 8°	Vertically	FCM-6L0000
	Singlemode FC	Vertically	FCM-620000
	Angled polish FC 8°	Vertically	FCM-6Q0000
	Singlemode ST®	Vertically	FCM-640000
	Angled polish E-2000	Vertically	FCM-6A/D0000
	Multimode SC	Vertically	MFCM-69/00000
	Multimode ST®	Vertically	MFCM-65/00000
	Multimode FC	Vertically	MFCM-6A/00000
	36 Singlemode SC Duplex	Vertically	FCM-DA/J0000
	36 Multimode SC Duplex	Vertically	MFCM-DB/00000
96	Singlemode SC	Vertically	FCM-770000
	Angled polish SC 8°	Vertically	FCM-7L0000
	Singlemode FC	Vertically	FCM-720000
	Angled polish FC 8°	Vertically	FCM-7Q0000
	Singlemode ST®	Vertically	FCM-740000
	Angled polish E-2000	Vertically	FCM-74/D0000
	Multimode SC	Vertically	MFCM-79/00000
	Multimode ST®	Vertically	MFCM-75/00000
144	Angled polish LX.5®	Vertically	FCM-TY0000
	Multimode LX.5®	Vertically	FCM-TX0000

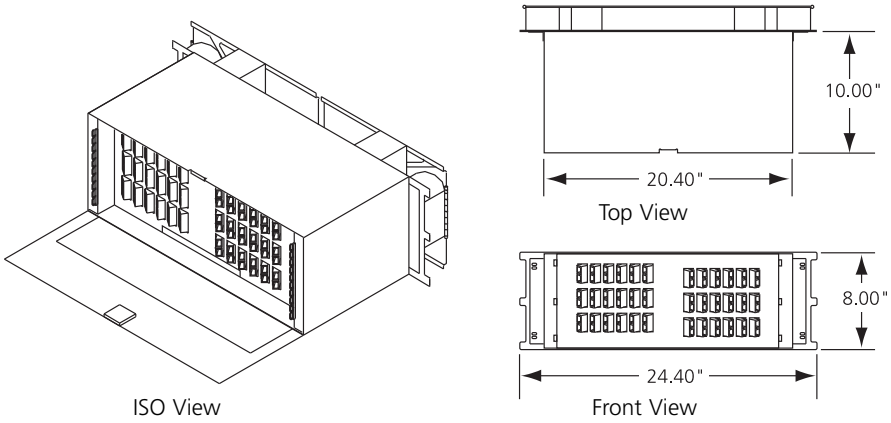

Duplex Connector Module

Rear Load Frame Connector Modules
Preterminated

Connector Module Equipped with Singlemode IFC

- Modules with IFC attached ship as a single unit with cable clamp installed
- Instruction kit describing installation procedures shipped with module
- Modules completely loaded with adapters, even when partially loaded with IFC
- Two ordering options:
  - Standard spool: module mounted to rack before IFC is uncoiled
  - Modified spool: module attached to spool and rotated as the IFC is uncoiled from the spool. The modified spool works best when a pipe is slid through the middle of the spool for use as an unwinding feature.

Catalogue Number

FCM- ___ ___ / ___ ___ ___ ___ - ___

Module Type / **Spool Type**

6	72-position FDF module	standard spool
7	96-position FDF module	standard spool
8	72-position FDF module	modified spool
9	96-position FDF module	modified spool
D	36-position/duplex	standard spool
E	36-position/duplex	modified spool
T	144-position FDF module (LX.5®)	standard spool
W	144-position FDF module (LX.5®)	modified spool

Adapter/Connector Type

0	Stub end
7	Singlemode SC, bronze sleeve
L	Singlemode SC angled polish, zirconia sleeve
2	Singlemode FC, bronze sleeve
Q	Singlemode FC angled polish, zirconia sleeve
4	Singlemode ST®, bronze sleeve
Y	Singlemode LX.5® angled polish, zirconia sleeve
T	Singlemode E-2000 angled polish, zirconia sleeve

Special Configurations

D	Cable exits downward for raised floor installation
Z	Ceramic sleeved ultra polish Adapters

Length in Metres

Cable Type

ZB	1x72	IFC stranded	House Cable* +
ZC	1x96	IFC stranded	House Cable* +
A	1x12	IFC stranded fibre	SMF-28
AZ	2x12	IFC stranded fibre	SMF-28
AG	3x12	IFC stranded fibre	SMF-28
CG	4x12	IFC stranded fibre	SMF-28
3	6x12	IFC stranded fibre	SMF-28
B	1x24	IFC stranded fibre	SMF-28
HA	1x24	IFC ribbon fibre	Sumitomo
HB	1x24	OSP ribbon dielectric	Alcatel
CT	1x24	Indoor/outdoor 1st link	Pirelli
DU	1x24	Plenum stranded fibre	SMF-28
AY	2x24	IFC stranded fibre	SMF-28
AE	3x24	IFC stranded fibre	SMF-28
AV	4x24	IFC stranded fibre	SMF-28
C	1x36	IFC stranded fibre	SMF-28
MA	1x36	IFC ribbon fibre	Sumitomo
Z	2x36	IFC stranded fibre	SMF-28
2	1x48	IFC stranded fibre	SMF-28
JA	1x48	IFC ribbon fibre	Sumitomo
EV	1x48	Plenum stranded fibre	SMF-28
4	2x48	IFC stranded fibre	SMF-28
V	1x72	IFC stranded fibre	SMF-28
DS	1x72	IFC ribbon fibre	Sumitomo
GE	1x72	OSP dielectric CLT	House ribbon
FA	1x72	Indoor/outdoor 1st link	Pirelli
CP	1x72	Plenum stranded fibre	SMF-28
L	1x96	IFC stranded fibre	SMF-28
LA	1x96	IFC ribbon fibre	Sumitomo
GJ	1x96	Indoor/outdoor 1st link	Pirelli
EH	1x144	IFC stranded fibre	SMF-28
LH	1x144	IFC ribbon fibre	Sumitomo

* Modules using ADC KRONE's house cable have a shorter lead time than modules using a specific cable manufacturer. ADC KRONE only provides GR-409 compliant cable that meets or exceeds our high quality standards. House cable vendors include Alcatel, Corning, and Pirelli.

\+ When selecting ADC KRONE's house cable, the module type must be either 8, 9 or E. The module will then be packaged in ADC KRONE's new protected spool where the module is shipped inside the spool for added protection.

Rear Load Frame Connector Modules
Preterminated

Connector Module Equipped with Multimode IFC

Catalogue Number

MFCM - ___ ___ / ___ ___ ___ ___ ___ - ___

Length (in metres)
Example:
0 5 0 = 50 meters

Connector Module

6	72-position module and spool separate
7	96-position module and spool separate
8	72-position module attached to modified spool[1]
9	96-position module attached to modified spool[1]
D	36-position duplex module standard spool
E	36-position duplex module modified spool[1]
8	144-position FDF module LX.5® standard module
9	144-position FDF module LX.5® modified spool

Connector #1 Type

5	Multimode ST®
9	Multimode SC
A	Multimode FC
B	Multimode SC
X	Multimode LX.5®

Connector #2 Type

0	Stub
5	Multimode ST®
9	Multimode SC
A	Multimode FC
X	Multimode LX.5®

Cable Type

AB	12 fibre stranded - 62.5/125	C
BB	24 fibre stranded - 62.5/125	C
CB	36 fibre stranded - 62.5/125	C
VB	72 fibre stranded - 62.5/125	C
LB	96 fibre stranded - 62.5/125	C
ZB	(2) 36 fibre stranded - 62.5/125	C

Breakout* Panel Typ

None	FC
A	7"
D	Un ins

* ADC will customize the breakout length of the to ensure proper Cable Management. For compe products, ADC recommends using the FCM brea length which is 5.9 feet or 1.8 meters.

[1] May **only** be used with single cable configurations; minimum 50 feet (15.25 m) requirement

Rear Load Frame Modules

12-Pack Module Chassis

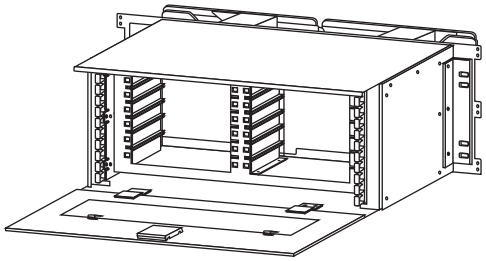

FDF-FCMVAM
For ADC KRONE Rear Load Frames ONLY

Ordering Information

Description	Dimensions (HxWxD)	Catalogue Number
Unloaded chassis for ADC KRONE Rear Load frames. Capacity: (6) 12-pack module assemblies *Rear cable management and doors attached to module*	8.0" x 24.4" x 12.1" (20.32 x 61.98 x 30.73cm)	FDF-FCMVAM
VAM 12-pack blank plate; for unused positions in chassis		VAM-12BLNK

12-Pack Module Assemblies

12-Pack module shown
with 12 fibre pigtail assembly

12-Pack module shown with
12 fibre intrafacility fibre cable (IFC)

- Each connector chassis accepts up to six 12-pack assemblies: terminates up to 72 fibres
- 12-pack assembly equipped with FC, ST®, SC or E-2000 connectors
- Connectors on the 12-packs angled toward either left or right of chassis
- 12-pack assemblies can be ordered with pre-terminated 12 fibre stranded IFC, or 12 fibre ribbon IFC, or 12 fibre pigtail assemblies
- 12-pack assemblies can be installed in both ADC KRONE Front and Rear Load VAM module chassis

Rear Load Frame Modules

12-Pack Module Assemblies with 5m Pigtails

Catalogue Number

F12P- ___ ___ 0 0 0 ___ - SYM

Singlemode Connector Type (Single End)

2	FC ultra polish
4	ST® ultra polish
7	SC ultra polish
L	SC angled polish
Q	FC angled polish
V	E-2000 angled polish

OR

Multimode Connector Type (Single End)

5	ST® (62.5/125)
9	SC (62.5/125)

Singlemode 12-Fibre Soft-Walled Pigtail Assembly

2	Corning stranded fibre 900 m breakout
3	Alcoa 12 fibre ribbon - oval jacket

OR

Multimode 12-Fibre Soft-Walled Pigtail Assembly

5	Stranded fibre 900 m breakout (62.5/125)

Cable Orientation

L	Left
R	Right

12-Pack Module Assemblies with IFC

Catalogue Number

F12V- ___ ___ ___ ___ ___ ___ - SYM

Singlemode Connector Type (Single End)

2	FC ultra polish
4	ST® ultra polish
7	SC ultra polish
L	SC angled polish
Q	FC angled polish
V	E-2000 angled polish

OR

Multimode Connector Type (Single End)

5	ST® (62.5/125)
9	SC (62.5/125)

Singlemode 12-Fibre IFC Type

0	Adapter/Retainers Only (No IFC cable assembly)
8	Corning stranded IFC
4	Corning stranded fiber 900 m breakout (double jacketed)
7	Sumitomo ribbon IFC

Length (in metres)
Example:
0 5 0 = 50 metres
1 2 5 =125 metres
To convert from feet to metres, divide the total number of feet by 3.28 and round up to the nearest whole number.

Cable Orientation

L	Left
R	Right

OR

Multimode 12-Fibre IFC Type

9	Stranded fibre 900 m breakout (62.5/125)

For double-ended IFC, insert "/" between the two desired connector type codes e.g. F12V-7/24050L-SYM: 12-pack with double jacketed IFC, ultra PCSC connectors on module and ultra PCFC on far end, 50m.

* Only the "F12V" series can be configured with or without cable. The "F12P" series must be ordered with cable preterminated to the unit.

Rear Load Frame Splice Modules

Rear Load Splice Module

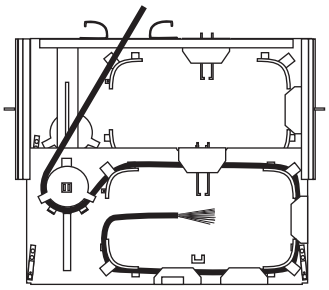

Top View
Rear Load Splice Module
Loaded with Pigtails

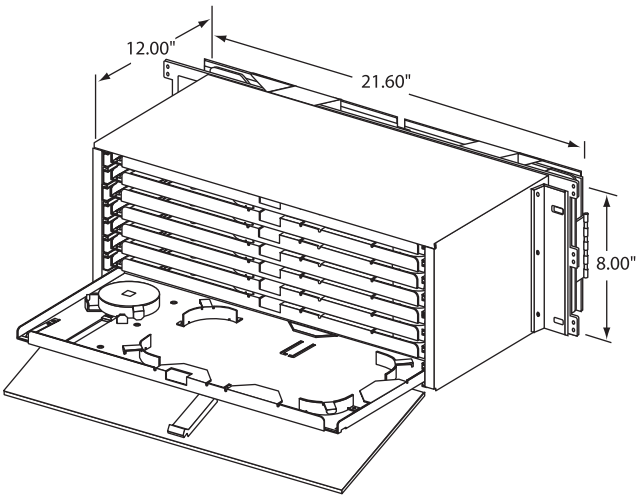

Rear Load Splice Module
E-501-L18

- Splice modules for rear load frames include 20.32 cm (8") rear doors and rear cable management
- Module contains eight splice drawers, provides protective enclosure for mounting splice trays and for coiling the service loop required for off-shelf splicing
- Both outside plant (OSP) and fibre optic terminal (FOT) patch cords are terminated at the **rear** of the FDF, making them less vulnerable during routine maintenance performed on the **front** of the FDF
- Each splice drawer holds two 12 fibre (single) or one 24 fibre (dual) splice tray
- Splice trays are available with hear shrink fusion, bare fusion, mechanical (Elastomeric)/mass fusion, FibrLok®, Northern Telecom QPAK, rotary, Fibrelign fusion or Raychem type splice chips.
- Each drawer designed to handle **twenty-four 900 micron pigtails or twelve 3 mm pigtails**
- Designation labels attached to front of each drawer identify contents
- Cover encloses the splice module for protection from normal frame activity
- Pigtail and OSP buffer tubes enter and exit through openings on the back of the module
- Patented splice tray with slack take-up wheel keeps constant tension on the fibre cable, prevents binding when drawer is closed
- Cable clamps must be ordered separately

Ordering Information

Description	Dimensions (HxWxD)	Catalogue Number
Splice module *For rear load frames*	8.0" x 24.41" x 12.0" (20.32 x 62.0 x 30.48 cm)	E-501-L18
Cable clamp (0.4" - 1.2" O.D.)		E-501-L40

Rear Load Frame Accessories

Splice Trays

Assembled Splice Trays and Chips

Splice trays may be purchased separately or supplied with a loaded fibre frame. Each ADC KRONE 8-inch splice module has eight splice drawers capable of holding up to two single, 12-position splice trays or one dual 24-position splice tray for a total of 192 fibres when splicing individual fibres or 384 fibres when performing mass fusion splicing with ribbon fibres.

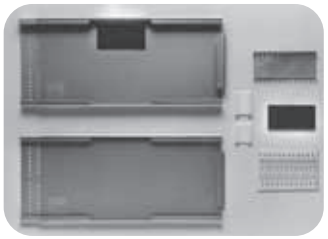

Single and Dual Splice Trays

Ordering Information

Description	Number of Splices per Tray	Number of Splice Trays per Drawer	Splice Module Capacity	Catalogue Number
12-Position Splice Trays Single Height				
Bare fusion	12	2	192	FST-FT
Heat shrink fusion	12	2	192	FST-HS
Mechanical (elastomeric)	12	2	192	FST-MT
Mass Fusion**				
Rotary	12	1	96	FST-RT
FibrLok®	12	1	96	FST-3M
Northern Telecom QPAK	12	2	192	FST-NT
Fibrelign Fusion	12	2	192	FST-PLP
18-Position Splice Trays Single Height				
Heat shrink fusion	18*	2	192	FST-HS-3
24-Position Splice Trays Dual Height				
Bare fusion	24	1	192	FST-D-FT
Heat shrink fusion	24	1	192	FST-D-HS
Mechanical (elastomeric)**	24	1	192	FST-D-MT
Rotary	24	1	192	FST-D-RT
FibrLok®	24	1	192	FST-D-3M
Northern Telecom QPAK	24	1	192	FST-D-NT

* Used with 8 fibre soft-wall bundled pigtail assembly, maximum 32 fibres per drawer

Rear Load Frame Accessories

Separate Splice Trays and Chips

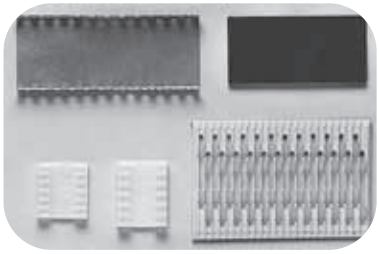

Loose Chips

Ordering Information

Description	Catalogue Number
Splice trays, empty (without chips):	
Single splice tray	FST-S-N/C
Single splice tray with recess	FST-S/R-N/C
Dual splice tray	FST-D-N/C
Splice chips	
Bare fusion	FSC-FT
Heat shrink fusion	FSC-HS
Mechanical (Elastomeric)	FSC-MT
Rotary	FSC-RT
Northern Telecom QPAK	FSC-NT
Universal Raychem*	FSC-USRT
Fibrelign fusion	FSC-PLP

* May only be used in dual type splice tray.

Splice Protector Sleeves

Ordering Information

Description	Catalogue Number
Single fibre; 40mm length, 1 each	FST-ACC001
Single fibre; 60mm length, 1 each	FST-ACC002
12 fibre ribbon - mass fusion - heat shrink; 40mm length, 1 each	FST-ACC006

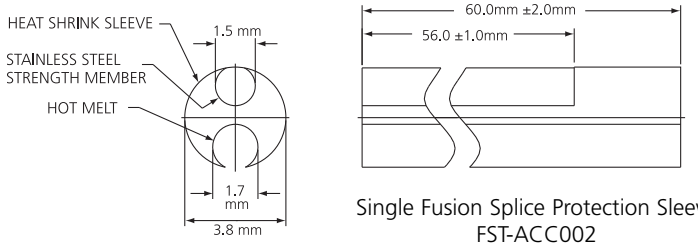

Single Fusion Splice Protection Sleeve
FST-ACC002

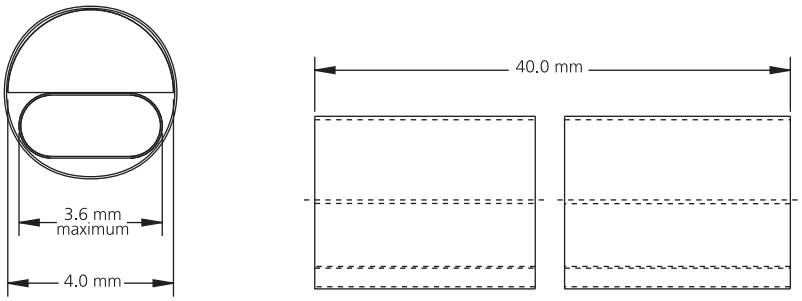

Mass Fusion Splice Protection Sleeve
FST-ACC006

Rear Load Frame Storage Modules

Fibre Storage Disk (FSD) Module

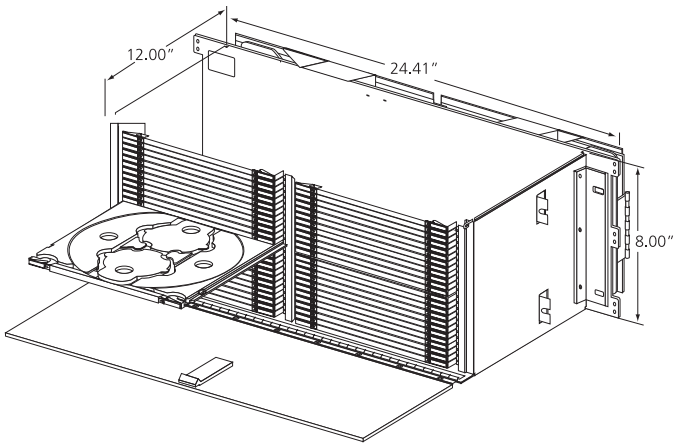

FSD Module for Rear Load Frames
E-501-L17

- Fibre storage disk modules for rear load frames include 20.32cm (8") rear doors and rear cable management.
- Chassis with 48 storage disk assemblies, front cover and designation labels
- Each module accommodates 48 separate patch cords (one per disk) and stores 3.4m (9.8 to 13.1') of 3mm fibre per disk
- Minimum bend radius of 1.5 inches (3.81cm) maintained for stored patch cords
- To maximise the termination density on the fibre frame, ADC KRONE recommends that fibre optic terminal (FOT) jumper slack be stored at the FOT bay. for storage panel solutions.
- To maximise the termination density on the fibre frame, ADC KRONE recommends the use of an interbay management panel to store cross-connect patch cord slack.

Ordering Information

Description	Dimensions (HxWxD)	Catalogue Number
48-position storage disk module *For rear load frames*	8.0" x 24.41" x 12.0" (20.32 x 62.0 x 30.48cm)	E-501-L17

ADC KRONE recommends storage be provided at the FOT for equipment jumpers used in cross-connect applications.

Rear Load Frame Storage Modules

Cable Management Tray Storage Module

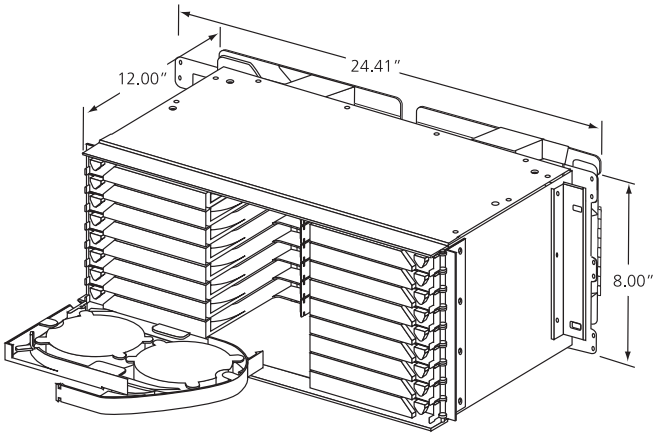

Cable Management Tray for Rear Load Frames
E-501-L16

- Module includes 20.32 cm (8") rear doors and rear cable management
- Cable Management Trays (CMTs) are hinged to chassis and swing outward to the front
- Fibres routed into and out of entry point near hinge
- Each CMT holds up to two patch cords, with a total capacity of up to 8 - 10 m (26.23' to 32.79') of 3 mm fibre
- Designation strip, attached to front, identifies contents of each tray
- To maximize the termination density on the fibre frame, ADC KRONE recommends that fibre optic terminal (FOT) jumper slack be stored at the FOT bay.
- To maximize the termination density on the fibre frame, ADC KRONE recommends the use of an interbay management panel to store cross-connect patch cord slack.

Ordering Information

Description	Dimensions (HxWxD)	Catalogue Number
Cable management tray storage module with 18 CMTs and 20.32 cm (8") rear door *For rear load frames*	8.0" x 24.41" x 12.0" (20.32 x 62.0 x 30.48cm)	E-501-L16

ADC KRONE recommends storage be provided at the FOT for equipment jumpers used in cross-connect applications.

7-Inch Fibre Distribution System

Covers on the front and rear of the 7-inch FDF modules
protect the fibre from physical damage and tampering.
Modules shown with 4" x 5" vertical cable guides (ordered separately)

ADC KRONE has designed a 7-inch based fibre distribution system incorporating the cable management features and benefits found in our original fibre distribution frame. The 7-inch system was designed to match an existing installed base of Lucent Technologies' LGX® fibre frames, with the enhanced cable management features of the ADC KRONE fibre frame.

Superior cable management is the hallmark of ADC KRONE's unique adapter retainer which orients every connector toward the side of the bay. The end result is vastly improved patch cord management over non-angled adapters. The angled adapter also ensures that patch cords do not violate the 3.81mm(1.5") minimum bend radius. In fact, throughout our FDF modules, ADC KRONE has designed radius limiters and edge protectors to ensure that the minimum bend radius is maintained throughout the fibre frame. The design ensures that even the most inexperienced installer will do the job right, every time.

Covers on the front and rear of the FDF modules protect the fibre from physical damage and tampering. In addition, all fibre routing troughs are designed to enclose fibre and guard against inadvertent snags from passing personnel and equipment.

Choosing a Fibre Distribution Frame Style

Introduction

7-Inch LGX-Compatible Style Fibre Distribution Frame

7-inch LGX-compatible modules are designed to be mounted in LGX framework, 19 or 23-inch channel, or unequal flange style racks. The connector module has the same footprint as Lucent Technologies' LGX® module, but offers enhanced cable management features. Modules can be ordered with factory-installed IFC for off-frame splicing or with pigtails for on-frame splicing.

7-inch LGX-Compatible Style FDF Features

- 7" connector module has a similar footprint to Lucent Technologies' LGX module and will mount into existing LGX frames along with LGX modules
- ADC KRONE's 7" system offers angled retainers, front vertical cable guides, the interbay management panel and optional rear vertical cable guides
- Can be ordered with factory pre-terminated IFC or pigtails

Network Style Unequal Flange Bay

- Can be used in either cross-connect or interconnect applications
- Up to 648 terminations with standard simplex connectors or 1296 terminations with LX.5® connectors in a 7" bay
- 14" lower trough to accommodate jumper slack

7' LGX-compatible framework

- Designed to line up with existing frames manufactured by other vendors
- Up to 648 terminations with standard simplex connectors or 1296 terminations with LX.5® connectors in a 7" bay
- 10" lower trough and 4" upper trough to match existing frame lineups

Connector Modules *with* and *without* IFC

- 72 fibre capacity: supports all simplex adapter types
- Used for FOT terminations (without IFC) and for OSP terminations (with IFC)
- 72 fibre capacity: ADC KRONE 12-pack termination plug-ins available with pigtails or IFC

Value-Added Module

- An organised platform for deployment of fibre optic components such as splitters, WDMs, fibre optic switches, etc.
- Accepts 12 six-position bulkhead plates or 12 single VAM plug-ins

Slack Storage: uses Interbay Management Panel

- Universal frame interbay management panel requires 12.7cm (5") bay spacing
- Retrofit interbay management panel does not require bay spacing (requires 23" UEF bay)

Splice Module

- Supports 144 fibres when splicing individual fibres
- Supports 432 fibres when mass fusion splicing ribbon fibres

LGX is a registered trademark of Lucent Technologies, a Delaware Corporation, Norcross, GA.

7-Inch System Frames

7-Inch Fibre Distribution System Universal Bay

The 7-inch Fibre Distribution System universal bay provides the framework for managing a cross-connect or interconnect fibre system. The modular design enables customisation and expansion.

Ordering Information

Description	Catalogue Number
Universal bay, 23" W (58.42cm), putty white	
7' H x 12" W	
7' H (2.14m)	E-501-L91-A
9' H (2.75m)	E-501-L92-A
11.5' H (3.51cm)	E-501-L93-A

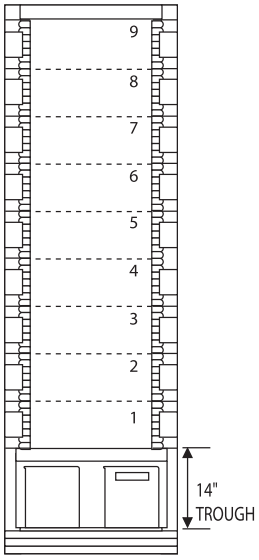

E-501-L91-A

7-Inch System Frames

Retrofitting Existing LGX Framework

Many engineers are finding that the vertical and horizontal cable ways are becoming congested as excess patch cords are stored in these cable ways. ADC KRONE has developed retrofit hardware which can alleviate this problem. By removing the current 4-inch x 5-inch vertical cable guides on the LGX framework and replacing them with a retrofit interbay panel and 2-inch x 5-inch vertical cable guides, the excess patch cords can be managed effectively.

LGX Compatible Hardware and Retrofit Panel

Two LGX compatible bays have been configured; one equipped with vertical cable guides, the other without. The bay without vertical cable guides (E-501-LGX) should be used when constructing a lineup in which the retrofit interbay panel is used or when the other vendor's panels will be mounted. The bay equipped with vertical cable guides (E-501-LGXVCG) is convenient to order when the ADC KRONE 7-inch module will be mounted.

Ordering Information

Description	Catalogue Number
LGX compatible bay, 7' H x 23" W (2.14 m x 58.42 cm), putty white	
Without vertical cable guides	E-501-LGX
With 4" x 5" (10.16 x 12.7 cm) vertical cable guides	E-501-LGXVCG

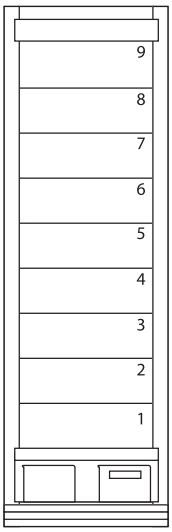

E-501-LGX (Without Vertical Cable Guides)

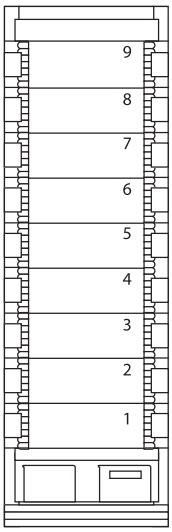

E-501-LGXVCG (With Vertical Cable Guides)

7-Inch System Hardware

Rack Installation Kits

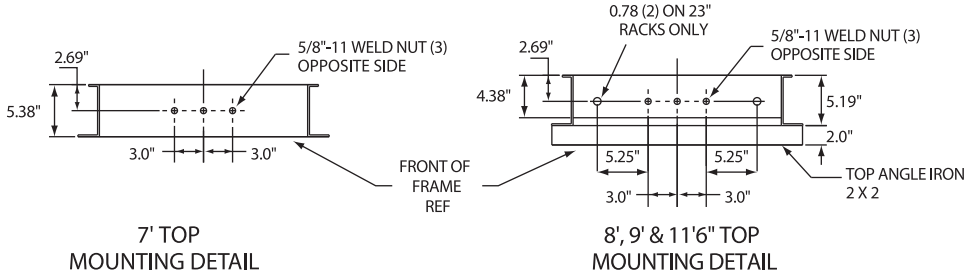

7' TOP MOUNTING DETAIL

8', 9' & 11'6" TOP MOUNTING DETAIL

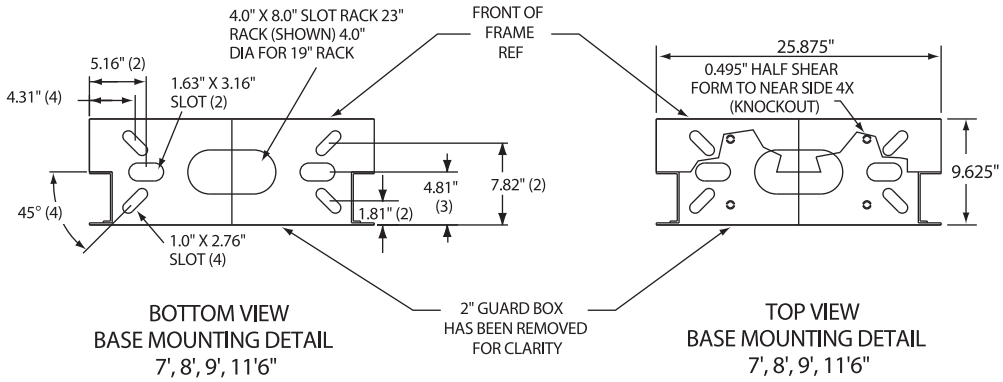

BOTTOM VIEW BASE MOUNTING DETAIL 7', 8', 9', 11'6"

TOP VIEW BASE MOUNTING DETAIL 7', 8', 9', 11'6"

Network Type Unequal Flange Rack Mounting Details

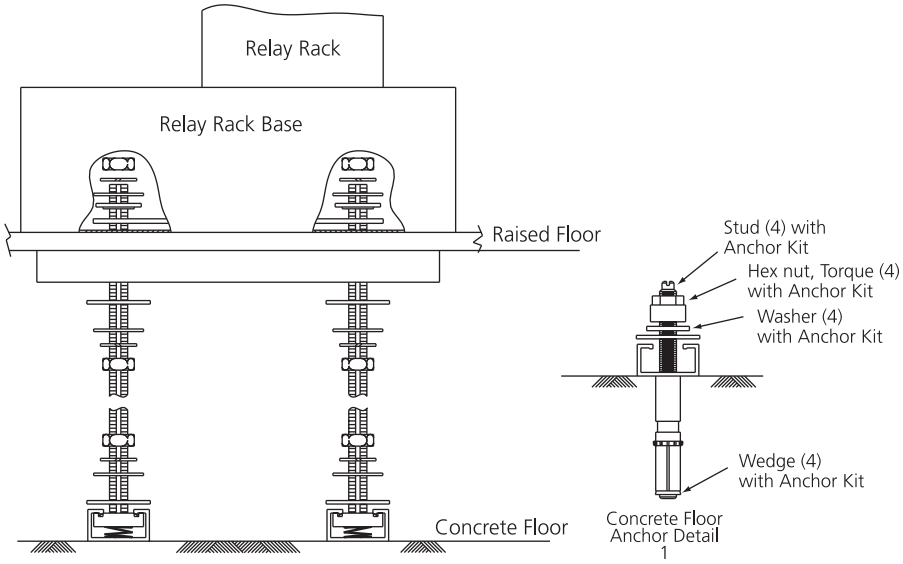

Underfloor Mounting Kit

Ordering information follows on the next page.

7-Inch System Hardware

Rack Installation Kits

Rack installation kits may be used on network racks and are rated to Earthquake Zone 4 areas.

Ordering Information

Description	Catalogue Number
Rack installation kit for 7' racks, includes: - (1) floor mounting kit - (1) top attachment kit for 7' racks - (12) rack tie brackets kits - (1) rack ground kit for 7' racks	RINST-DSX7-PW
Rack installation kit for 9' and 11' 6" racks, includes: - (1) floor mounting kit - (1) top attachment kit for 9' and 11' 6" racks - (22) rack tie brackets kits - (1) rack ground kit for 9' and 11' 6" racks	RINST-DSX9-PW
Universal anchor kit, for all UEF Racks includes: - (4) anchor assemblies - (2) universal hold down bars - (8) anchor plate washers - (8) shim plates .063 - (4) shim plates .125	RINST-FLR
5/8" Raised Floor Mounting Kit - (4) threaded rods 5/8" - 11" x 12" - (12) heavy nuts, locks and flat washers - (4) nuts with springs 1/2" x 13", and shoulder washers - (1) 10' unistrut and anchor kit	FDF-ACC146
5/8" Raised Floor Mounting Kit - (4) threaded rods 5/8" - 11" x 30" - (12) heavy nuts, locks and flat washers - (4) nuts with springs 5/8" x 11", and shoulder washers - (1) 10' unistrut - (1) RINST-FLR universal anchor kit	FDF-ACC238
1/2" Raised Floor Mounting Kit, 30" Threaded Rod - (4) threaded rods 1/2" - 13" x 30" - (12) heavy nuts, locks and flat washers - (4) nuts with springs 1/2" x 13", and shoulder washers - (1) 10' unistrut and anchor kit	FDF-ACC136
1/2" Raised Floor Mounting Kit, 42" Threaded Rod - (4) threaded rods 1/2" - 13" x 42" - (12) heavy nuts, locks and flat washers - (4) nuts with springs 1/2" x 13", and shoulder washers - (1) 10' unistrut and anchor kit	FDF-ACC198

LGX-Compatible Interbay Management Panels

The interbay management panel (IMP-7NRF) was designed for use with ADC's 7-inch module and LGX-style framework. This panel can be mounted to new or existing LGX-style framework without spacing between bays. Simply install the retrofit panel with ADC's 7-inch module and add 2-inch x 5-inch vertical cable guides (VCG-25). When 5-inch (12.7 cm) spacing is available between 23-inch bays, a conventional interbay panel (E-501-LGXIMP) and 4-inch x 5-inch vertical cable guides (VCG-45) can be used with the ADC 7-inch module. When 5-inch (12.7 cm) spacing is available between 19-inch bays, the E-501-LGXIMP and 2-inch x 5-inch vertical cable guides (VCG-25) can be used with the ADC 7-inch module.

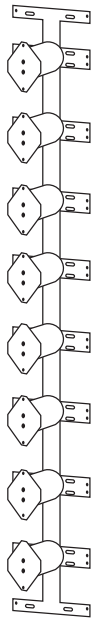

IMP-7NRF Retrofit Interbay Panel

Ordering Information

Description	Catalogue Number
Interbay Panels	
7' (2.14m) LGX retrofit interbay panel for 23" (58.42cm) racks, WECO hole spacing – **no bay spacing required**	IMP-7NRF
7' (2.14m) LGX compatible interbay panel for 19" (48.26cm) or 23" (58.42cm) racks, WECO or EIA hole spacing – **5" (12.7cm) spacing between bays required**	E-501-LGXIMP
Vertical Cable Guides (VCG)	
2" x 5" (5.08 x 12.7cm) VCGs for use only with ADC 7-inch module and with LGX retrofit interbay panel	VCG-25
4" x 5" (10.16 x 12.7cm) VCGs for use with ADC 7-inch module; for 23" (58.42cm) racks, WECO or EIA hole spacing	VCG-45

Retrofit Interbay Management Panels for LGX Modules

The IMP-7NRF interbay management panel can be used to retrofit existing LGX lineups where cross-connect cable management has become a problem. This panel can mount to existing LGX-style frames without spacing between bays. Simply remove the existing rings and replace them with the retrofit panel and new lower profile vertical cable guides (VCG-25AT). When five-inch spacing is available, a conventional interbay panel (E-501-LGXIMP) is also offered for use with LGX compatible bays.

Ordering Information

Description	Catalogue Number
Interbay Panels	
7' (2.14m) LGX retrofit interbay panel – **no bay spacing required**	IMP-7NRF
7' (2.14m) LGX compatible interbay panel – **5' (12.7cm) spacing between bays required**	E-501-LGXIMP
Vertical Cable Guides (VCG)	
2" x 5" (5.08 x 12.7cm) VCGs to retrofit LGX module	VCG-25AT

7-Inch System Hardware

Interbay Management Panel

- Provides storage between the bays for cross-connect jumpers
- Available for 7, 9 or 11.5-foot (2.14, 2.75, 3.51m) bays
- Trough filler insert protects the fibre in the lower trough between bays
- Includes a lower guard box and five-inch trough filler insert
- To provide space for these panels, all bays must be spaced five inches (12.7cm) apart

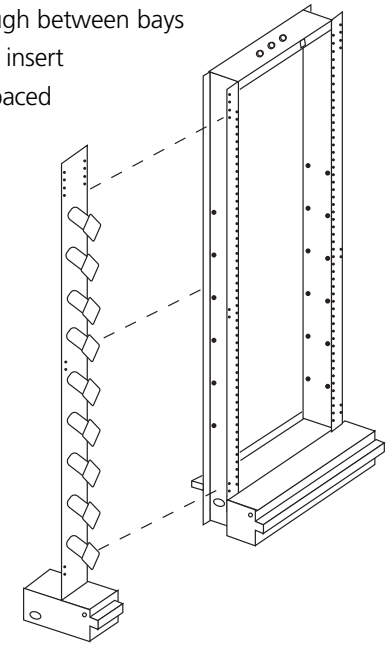

Ordering Information

Description	Dimensions (HxW)	Catalogue Number
Universal interbay management panel *Includes trough filler insert and lower 5" (12.7cm) guard box*		
Use with 14" [35.56cm] trough ***only***		
7' H (2.14m)	7' x 5" (2.14m x 12.7cm)	E-501-L139
9' H (2.75m)	9' x 5" (2.76m x 12.7cm)	E-501-L142
11.5' H (3.51m)	11.5' x 5" (3.52m x 12.7cm)	E-501-L143
Optional covers for interbay management panels		
7' H x 5" W (2.14m x 12.7cm)		E-501-L409

Optional cover kits are available for 14" lower troughs.
For existing lineups with 8" or 16" lower cable troughs.

Guard Boxes – Underfloor

Ordering Information

Description	Dimensions (HxWxD)	Catalogue Number
Underfloor guard boxes Rear access only. Used for routing OSP or IFC cable or patch cords from under floor to the rear of the bay.	3.94" x 4.88" x 4.9" (10 x 12.4 x 12.45cm)	FDF-ACC139
Front and rear access. Used for routing OSP, IFC or patch cords from under floor to the rear of the bay and patch cords from under floor to the front of the bay.	7.05" x 8.6" x 5" (17.9 x 21.84 x 12.7cm)	FDF-ACC152

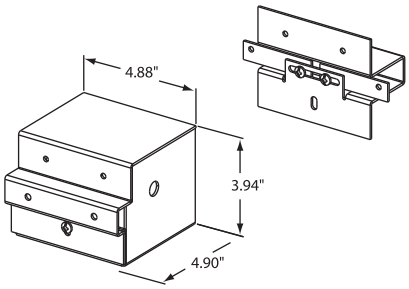

FDF-ACC139
Rear Access Underfloor Guard Box
(Front View)

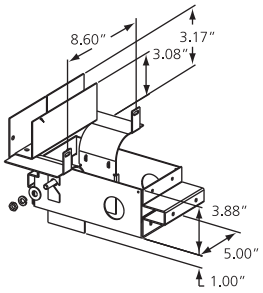

FDF-ACC152
Front/Rear Access Underfloor Guard Box
(Rear View)

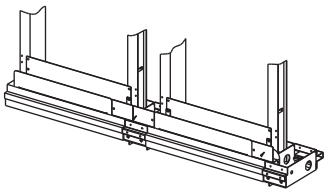

FDF-ACC152
Shown Installed Between Network Racks
and at End of Lineup
(Front View)

7-Inch System Hardware

End Guards

- Attaches to either a bay or interbay management panel
- Serves as a mounting place for outlets and switches
- Used interchangeably for either left or right applications
- Provides protection and a finished appearance at the start and end of bay lineups

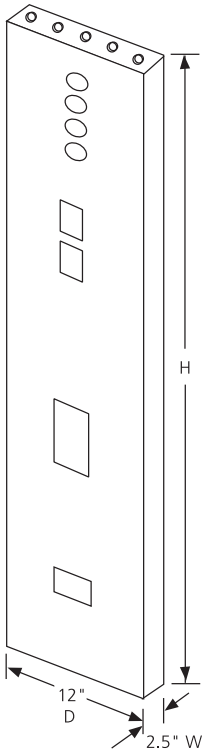

Ordering Information

Description	Catalogue Number
Network bay end guard panel *Mounts on IMP or bay*	
2.5" W (6.35cm) and:	
7' H (2.14m) x 12" D	UEGP-7PW
9' H (2.75m) x 12" D	UEGP-9PW
11.5' H (3.51m) x 12" D	UEGP-115PW

Vertical Cable Guides

Mounts to the rear of the 7-inch connector module. The rear VCG protects and manages jumpers on the rear when the entire bay is dedicated to network jumpers (FOT equipment).

Ordering Information

Description	Catalogue Number
Rear VCG kit – 4" x 5" vertical cable guides (set of 2) with mounting hardware	FDF-ACC113

7-Inch System Connector Modules

7-Inch Connector Module

The 7-inch module has the same mounting dimensions as Lucent's LGX panel. It also incorporates all the beneficial features, such as angled retainers and bend radius protection, found in ADC KRONE's FDF modules.

Vertical cable rings must be ordered along with the ADC KRONE 7-inch connector module unless the panel is mounted into an ADC KRONE bay which includes rings. When mounting the panels in 19-inch racks or when using the **retrofit** interbay panel, 2-inch x 5-inch vertical cable guides (VCG-25) should be used; 4-inch x 5-inch vertical cable guides (VCG-45) should be used in 23-inch racks.

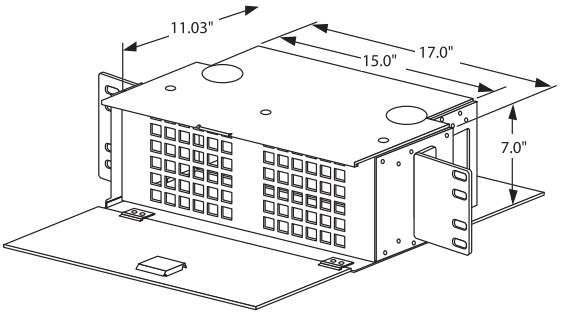

7-inch Connector Module
Shown Without Vertical Cable Guides
(ordered separately)

Ordering Information

Number of Terminations	Adapter Type	Numbered	Catalogue Number
72	Singlemode SC	Vertically	FCM-670000-A
	Angled polish SC	Vertically	FCM-6L0000-A
	Singlemode FC	Vertically	FCM-620000-A
	Angled polish FC	Vertically	FCM-6Q0000-A
	Singlemode ST®	Vertically	FCM-640000-A
	Angled polish E-2000	Vertically	FCM-6A/D0000-A
	Singlemode ST® Receptacles	Vertically	FCM-6R0000-A
	Singlemode SC	Vertically	FCM-690000-A
	Singlemode ST®	Vertically	FCM-650000-A
	Singlemode FC	Vertically	FCM-6A0000-A
144	Angled Polish LX.5®	Vertically	FCM-TY0000
	Multimode LX.5®	Vertically	FCM-TX0000

7-Inch System

Fibre Pigtail Assemblies

Fibre pigtail assemblies are used within a frame and typically routed from the backside of a connector module to the splice module where they are spliced to OSP fibres. ADC KRONE offers 5-metre stranded pigtail assemblies that consist of 12 color-coded 900µm fibres covered in an overall jacket referred to as a soft wall bundle. The flexible jacket provides physical protection for the individual fibres as they are routed from the connector module to the splice module.

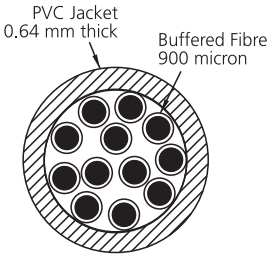

(12 fibre shown)

Soft Wall
(12 Fibre Shown)

Ordering Information

Connector Type	Catalogue Number
Singlemode SC	FPM-07/0-M006.17M-39
Angled Polish SC	FPM-0E/0-M006.17M-39
Singlemode FC	FPM-02/0-M006.17M-39
Angled Polish FC	FPM-0D/0-M006.17M-39
Angled Polish LX.5®	FPM-0X/0-M006.17M-39
Singlemode ST®	FPM-04/0-M006.17M-39
Angled Polish E-2000	FPM-0J/0-M006.17M-39
Multimode LX.5®	MFPM-X/0-NB006.17M-39
Multimode SC	MFPM-9/0-NB006.17M-39
Multimode ST®	MFPM-5/0-NB006.17M-39
Multimode FC	MFPM-A/0-NB006.17M-39

7-Inch System Connector Modules

Preterminated

7-Inch Connector Module with Singlemode IFC

The 7-inch connector module can also be loaded with intrafacility fibre cable (IFC). The module is putty white and adapts to 19 or 23-inch rack mounting, WECO or EIA spacing.

NOTE: Each ADC KRONE 7-inch module requires a set of vertical cable guides unless it is mounted into a bay which already includes them (see ordering information below).

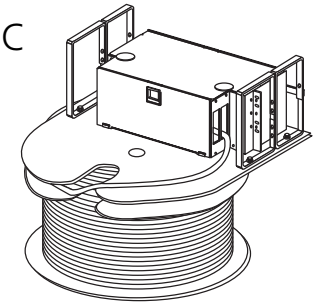

Rear View
7-inch Connector Module with Shipping Reel

Catalogue Number

FCM- __ __ / __ __ __ __ - A - __

Module Type / **Spool Type**

6	72-position FDF module	standard spool
7	96-position FDF module **	standard spool
8	72-position FDF module	modified spool
9	96-position FDF module **	modified spool
D	36-position/duplex	standard spool
E	36-position/duplex	modified spool
T	144-position FDF module (LX.5®)	standard spool
W	144-position FDF module (LX.5®)	modified spool

Adapter/Connector Type

0	Stub end
7	Singlemode SC, bronze sleeve
L	Singlemode SC angled polish, zirconia sleeve
2	Singlemode FC, bronze sleeve
Q	Singlemode FC angled polish, zirconia sleeve
4	Singlemode ST®, bronze sleeve
Y	Singlemode LX.5® angled polish, zirconia sleeve
T	Singlemode E-2000 angled polish, zirconia sleeve

** 96 position panels are 22.9cm (9") tall

* Modules using ADC KRONE's house cable have a shorter lead time than modules using a specific cable manufacturer. ADC KRONE only provides GR-409 compliant cable that meets or exceeds our high quality standards. House cable vendors include Alcatel, Corning, and Pirelli.

When selecting ADC KRONE's house cable, the module ype must be either 8, 9 or E. The module will then be packaged in ADC KRONE's new protected spool where the module is shipped inside the spool for added protection.

Special Configurations

D	Cable exits downward for raised floor installation
Z	Ceramic sleeved adapters

Length in Metres

Cable Type

ZB	1x72	IFC stranded	House Cable*+
ZC	1x96	IFC stranded	House Cable*+
A	1x12	IFC stranded fibre	SMF-28
AZ	2x12	IFC stranded fibre	SMF-28
AG	3x12	IFC stranded fibre	SMF-28
CG	4x12	IFC stranded fibre	SMF-28
3	6x12	IFC stranded fibre	SMF-28
B	1x24	IFC stranded fibre	SMF-28
HA	1x24	IFC ribbon fibre	Sumitomo
HB	1x24	OSP ribbon dielectric	Alcatel
CT	1x24	Indoor/outdoor 1st link	Pirelli
DU	1x24	Plenum stranded fibre	SMF-28
AY	2x24	IFC stranded fibre	SMF-28
AE	3x24	IFC stranded fibre	SMF-28
AV	4x24	IFC stranded fibre	SMF-28
C	1x36	IFC stranded fibre	SMF-28
MA	1x36	IFC ribbon fibre	Sumitomo
Z	2x36	IFC stranded fibre	SMF-28
2	1x48	IFC stranded fibre	SMF-28
JA	1x48	IFC ribbon fibre	Sumitomo
EV	1x48	Plenum stranded fibre	SMF-28
4	2x48	IFC stranded fibre	SMF-28
V	1x72	IFC stranded fibre	SMF-28
DS	1x72	IFC ribbon fibre	Sumitomo
GE	1x72	OSP dielectric CLT	House ribbon
FA	1x72	Indoor/outdoor 1st link	Pirelli
CP	1x72	Plenum stranded fibre	SMF-28
L	1x96	IFC stranded fibre	SMF-28
LA	1x96	IFC ribbon fibre	Sumitomo
GJ	1x96	Indoor/outdoor 1st link	Pirelli
EH	1x144	IFC stranded fibre	SMF-28
LH	1x144	IFC ribbon fibre	Sumitomo

7-Inch System Splice Modules

7-Inch Splice Module

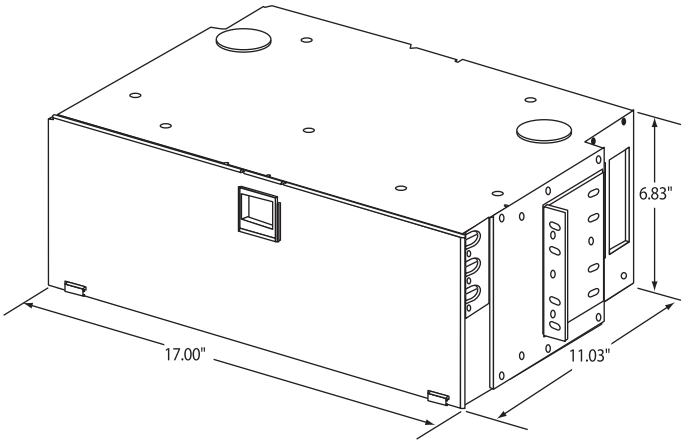

7-Inch Splice Module – Front View
shown without Vertical Cable Guides (ordered separately)

The 7-inch splice module has the same mounting dimensions as LGX panels and consists of drawers, trays, designation labels and a cover. This splice module has six drawers. Splice capacity is 144 when splicing individual stranded fibres or 432 fibres when using ribbon fibre and mass fusion splicing. **The 7-inch splice module requires F3DF splice trays**. Each drawer holds twenty-four 900 micron pigtails* or twelve 3 mm pigtails. A cover encloses the splice module for protection from normal frame activity. The 7-inch splice module provides a protective enclosure for mounting splice trays. Pigtails and cable enter and exit through access ports in the back of the module.

Vertical cable guides must be ordered along with the ADC KRONE 7-inch connector module unless the panel is mounted into an ADC KRONE bay which includes vertical cable guides. When mounting the panels in 19-inch racks or when using the **retrofit** interbay panel, 2-inch x 5-inch vertical cable guides (VCG-25) should be used; 4-inch x 5-inch vertical cable guides (VCG-45) should be used in 23-inch racks.

Ordering Information

Description	Catalogue Number
7-inch fibre distribution system splice module (19" or 23" rack mount)	FDS-190000
Vertical cable guides (VCG) *Each ADC 7-inch module requires a set of vertical cable guides unless it is mounted into a bay which already includes them*	
4" x 5" VCGs for 23" racks; WECO or EIA hole spacing only	VCG-45
2" x 5" VCGs for 23" racks – used only with retrofit interbay panel	VCG-25
2" x 5" VCGs for 19" racks, WECO or EIA hole spacing	VCG-25A
Cable clamp kit	FL2-ACC007

7-Inch System Accessories

7-Inch Splice Trays

For use in the Front Facing Fibre Distribution Frame and 7-Inch Splice Module. For splice trays to be used in Front or Rear Load Fibre Distribution Frames.

Each splice tray is purchased separately.

Ordering Information

Description	Catalogue Number
Splice trays, 12 splices per tray	
Mass fusion ribbon	FST-F3DF-MT-D*
Heat shrink fusion	FST-F3DF-HS
Bare fusion	FST-F3DF-FT
Mechanical (Elastomeric)	FST-F3DF-MT
Rotary	FST-F3DF-RT
FibrLok®	FST-F3DF-3M
Northern Telecom QPAK	FST-F3DF-NT

* Use only one FST-F3DF-MT-D per splice drawer.

Communication Panel

The COMP-21 communication panel features soft touch key access to nine dial lines (POTS or 1A2 Key Telephone) or seven dial lines and any combination of two office intercom and signal lines along with hold, conference and on-hook features. (The hold feature only functions with 1A2 key telephone.)

In addition to the features on the COMP-21, the COMP-11 is equipped with a remote headset jack circuit. This panel has nine soft touch keys that permit the remote headset jacks to be connected to any telephone line key position while allowing the panel to be free for use on other telephone or intercom lines.

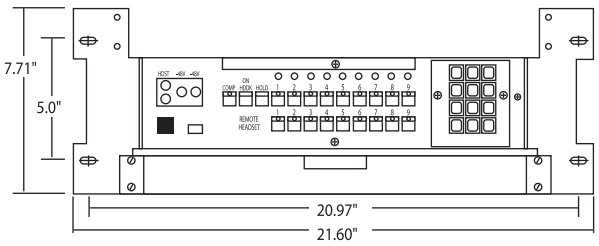

COMP-11 Communication Panel with Remote Headset Jack Circuit and Retractable Writing Shelf

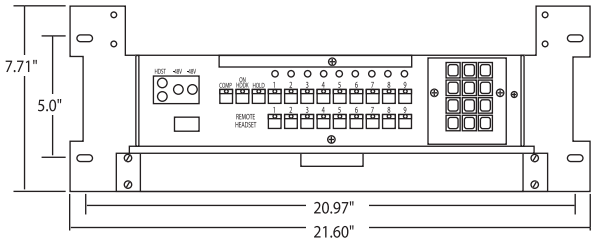

COMP-21 Communication Panel with Retractable Writing Shelf

Ordering Information

Description	Catalogue Number
COMP-11 communication panel with FDF mounting brackets and remote headset jack	
With retractable writing shelf	E-501-L140
Without retractable writing shelf	E-501-L175
COMP-21 communication panel with FDF mounting brackets	
With retractable writing shelf	E-501-L141
Without retractable writing shelf	E-501-L123
Headset with 3.66 m (12') coil cord	COMP-HDS
Communication cord with handset	COMP-HNDSKIT
Handset holder kit	COMP-HNR-P
Rear 203mm (8") doors and fanning triangles – used when communication panel is mounted in rear load frame	FDF-ACC050

Note: Headsets and a handset holder are not provided with the communication panels and must be ordered separately.

Accessories

Horizontal Cable Troughs

Lower horizontal cable troughs are always included with fibre bays. They can be purchased separately for special applications.

The upper cable trough is not a standard part of the bay. It should be used in applications in which patch cords need to be brought from the front of the frame to the rear. The upper cable trough is putty white and mounts at the top of the bay. Bend radius limiters are provided on the edges of the trough to maintain minimum bend radius requirements.

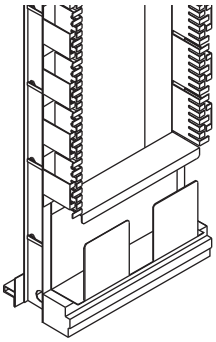

14-Inch Lower Cable Trough E-501-L136

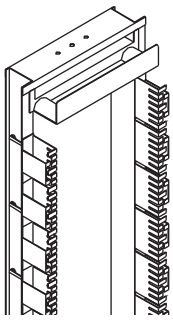

4-Inch Upper Cable Trough E-501-L164

Ordering Information

Description	Catalogue Number
Lower horizontal cable trough 23" W x 5" D (58.42 x 12.7cm)	
6" (15.24cm) Height	E-501-L73
8" (20.32cm) Height	FDF-ACC-LHCT
14" (35.56cm) Height	E-501-L136
16" (40.64cm) Height	FDF-ACC-LDCT
Upper horizontal cable trough with pass through capability 4" H x 23" W x 10" D (10.16 x 58.42 x 12.7cm)	E-501-L514

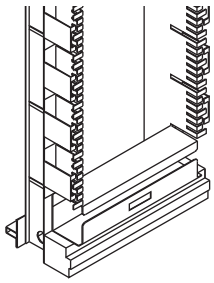

6-Inch Lower Cable Trough E-501-L73

Cover Kit for Lower Horizontal Cable Troughs

Ordering Information

Description	Catalogue Number
Cover for 14" (35.56cm) lower horizontal cable trough; **requires modified lower horizontal cable troughs**	
For 8" x 23" (20.32 x 58.42cm) mounting systems	FDF-ACC167

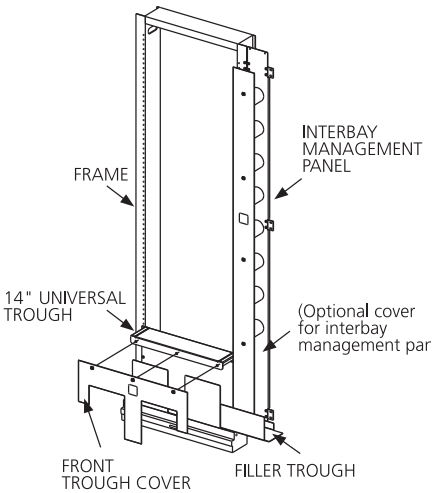

Accessories

Grounding Kit

The fibre distribution frame is equipped with a grounding kit designed with mechanical (clamps, straps, connectors) fittings. Order this kit only if you are building a frame using your own rack. When connecting frame ground to office ground conductor, an H-TAP bonding kit should also be ordered.

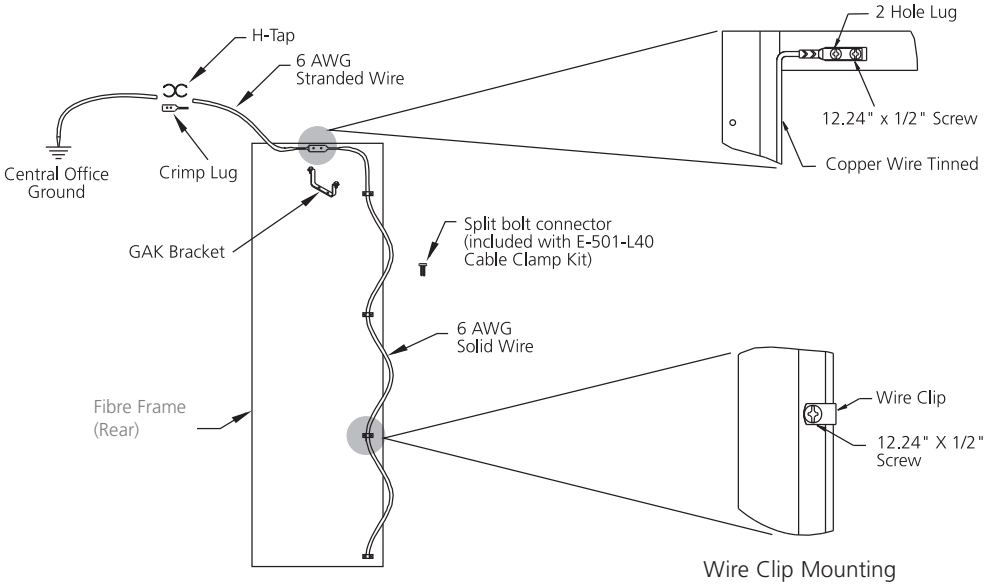

Grounding Kit Accessories

Wire Clip Mounting

Each kit includes the following:

FDF ground wire kit (included with all frames)

2 hole terminal lug	1 each
#6 copper tinned wire	13'
Wire clips	8 each
12 - 24 x 1/2" screws	10 each

H-TAP bonding kit

HTAP	1 each
HTAP insulated cover	1 each
2 hole terminal lug, crimp	3 each
Terminal lug, screw	4 each
Wire, 6 AWG stranded insulated	2'
Washer, star	6 each
Grease, no-ox	1 tube

GAK grounding kit

Bracket	1 each
Clamping bolt	2 each
Nut	2 each
Screw	10 each
Wire Clip	8 each
Wire, 6 AWG solid copper tinned	13'

Ordering Information

Description	Catalogue Number
FDF grounding wire kit*	E-501-L37
H-TAP bonding kit	E-501-L166
Grounding kit, channel racks	GAK

* Included with ADC KRONE Fibre Frame

Accessories

Rack Filler Plates

Rack filler plates are recommended for use between the splice frame and adjacent bays or end guards. The rack filler plates are putty white and come with a guard box.

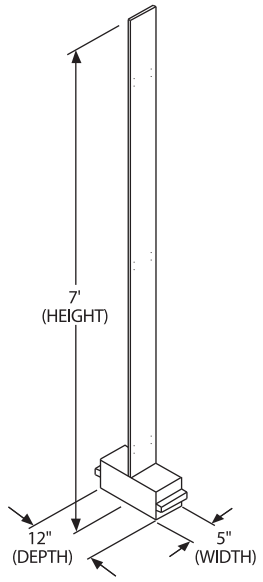

Ordering Information

Description	Catalogue Number
Rack filler plates, putty white, with guard box 5" W x 12" D (12.7 x 30.48cm) 7' H (2.14m) 9' H (2.75m) 11.5' H (3.51m)	 7RFP-5NPW 9RFP-5NPW 115RFP-5NPW

AC Outlet Kit and Raceways

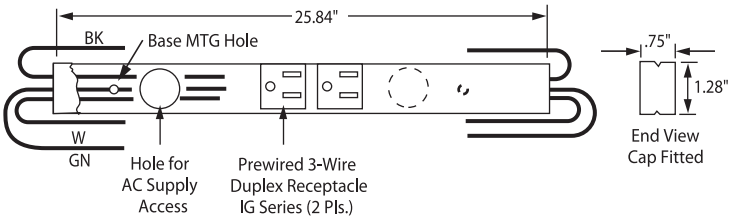

AC Outlet Kit

The AC outlet kit provides the hardware for mounting AC power outlets on the frame. Each kit includes a prewired AC power outlet strip that mounts at the bottom of the frame. Raceways for routing the power wires to the outlet strip are also available.

Ordering Information

Description	Catalogue Number
AC outlet kit – 25.84" (65.63cm)	ACOK-PWNB
AC raceway	
25.84" (65.63cm) – *used for bays which do not require AC power*	ACB-PWNB
5.0" (12.7cm) – *used with AC outlet kit when bays are spaced 5.0" (12.7cm)*	AC-PWNB-RS5*

* This raceway must be ordered with each Interbay Management Panel when an AC outlet is ordered.

Cable Clamps and Dual Cable Clamp Plate Kit

The cable clamp kits provide a means of securing the end of an outside plant (OSP) or intrafacility cable to the cable plate. Cable diameters must be between 1.02 to 3.05 cm (0.4" and 1.2"). Additional components are included with the OSP clamp kit for grounding metallic parts of the cable such as metallic strength members or metallic sheaths.

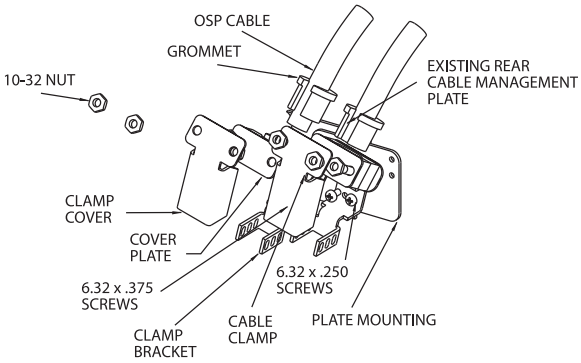

Dual Cable Clamp Plate Kit

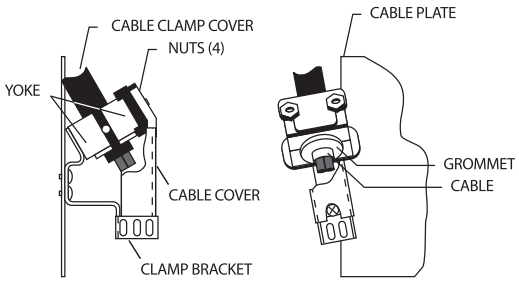

Cable Clamp Kit

Ordering Information

Description	Cable Diameter Supported	Catalogue Number
Cable clamp kit For IFC and outside plant cable	1.02 to 3.05cm (0.4" - 1.2")	E-501-L40
Dual cable clamp plate kit *doubles the number of clamping positions on the frame from 32 to 64;* ***kit includes plate only***		E-501-L41

Note: Only for use with 8" system

Accessories

8-inch (20.32cm) Mounting Kit

There are times when a single module must be mounted in a bay without a cable management system. An individual 8-inch mounting kit is available to mount FDF modules into certain rack types. The E-501-L347 kit includes the rear fanning triangles and front vertical cable guides. An 20.32 cm (8") door can be added separately.

Ordering Information

Description	Catalogue Number
Rear Load Module Kit Contains two 8" front vertical cable guides and screws	FDF-ACC145
Front Load Module Kit Contains two front vertical cable guides, 8" section of rear cable management and required mounting screws	E-501-L347

Designation Labels

All frames and individual modules are equipped with designation cards. If additional designation cards are required, order the following:

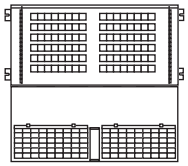

E-501-L69

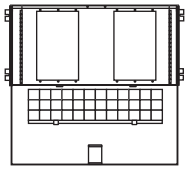

E-501-L218

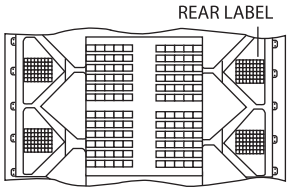

Rear view of E-501-L69 and E-501-L218

Ordering Information

Description	Catalogue Number
Designation label kits (front and rear)	
With (2) 4" x 10" cards – *for 96 termination modules ordered prior to 11/93*	E-501-L69
With (1) 4" x 18" cards – *for 96 termination modules ordered after 11/93*	E-501-L218
Retrofit kit with clips – *converts E-501-L69 to E-501-218*	E-501-L219

Blank Panel

The blank panel occupies one module space in either a front load or rear load bay.

Ordering Information

Description	Catalogue Number
Blank panel, 8" H (20.32cm)	E-501-L39

Value-Added Module System

Introduction

ADC KRONE's Value-Added Connector Module System (VAM System) adds flexibility and functionality to the optical transport system by enabling telecommunications service providers to easily incorporate optical components into the network. This versatile platform lays the foundation for the fibre distribution frame of the future.

The VAM System consists of a variety of chassis and optical components that fit into all existing ADC fibre distribution frames and various other mounting environments. Optical components may include:

- Splitters
- Wavelength division multiplexers (WDMs)
- Variable attenuators
- Optical switches

Features and Benefits

Many VAM chassis are available
VAMS are compatible with new and existing fibre distribution frames; ADC KRONE also offers VAM chassis for 19" and 23" (48.26 and 58.42cm) equipment rack applications. A wall mount is also available.

Monitor testing
Enables providers to troubleshoot networks without forcing disruption of service

Enclosed plug-in modules
Optical components are protected from physical and environmental damage

Angled retainers
Maintains minimum bend radius of fibre patch cords

Horizontal mounted plug-in modules
Modules can be added or removed from the chassis without interfering with existing terminated patch cords

Universal mounted plug-in modules
No need to order different part numbers for left side or right side mounted modules

Extensive product labeling
Customers have all the information required for installation and maintenance without referring to the user manual or drawings

Flexible platform
Modules can be created for new applications quickly and easily to meet customer requirements

Module Labeling System
Schematics are marked on peel-off labels that can be attached to the chassis designation labeling system

Value-Added Module System

8-Inch Chassis – 12 Single Plug-In Modules

The FDF VAM chassis was designed to fit into any open chassis location within an existing ADC KRONE fibre distribution frame (FDF). The FDF VAM chassis is available with or without rear cable management. It can accommodate a maximum of either 12 plug-in modules, 12 bulkhead plates, 12 blank panels or any combination thereof. The 8-inch rear load chassis mounts in EIA or WECO racks.

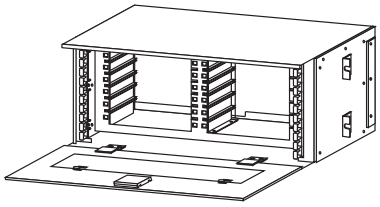

FDF-STDVAM
For ADC KRONE Front Load Frames ONLY

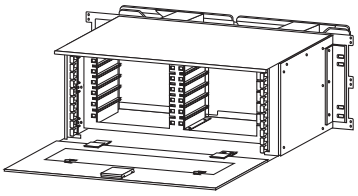

FDF-FCMVAM
For ADC KRONE Rear Load Frames ONLY

Ordering Information

Description	Dimensions (HxWxD)	Catalogue Number
Unloaded chassis for ADC KRONE front load frames No rear cable management or doors attached to module	8.0" x 21.6" x 8.7" (20.32 x 54.86 x 22.10cm)	FDF-STDVAM
Unloaded chassis for ADC KRONE rear load frame Rear cable management and doors attached to module	8.0" x 24.4" x 12.1" (20.32 x 61.98 x 30.73cm)	FDF-FCMVAM

Value-Added Module System

7-Inch Chassis – 12 Single Plug-In Modules

The 7-inch VAM chassis was designed to fit into any open chassis location within an existing ADC KRONE 7-inch module system FDF or in an LGX-style frame. It can accommodate a maximum of 12 single plug-in modules, 12 bulkhead plates, 12 blank panels or any combination thereof. Adjustable mounting brackets are provided for 19-inch or 23-inch rack mounting environments. The 7-inch chassis mounts in EIA or WECO racks.

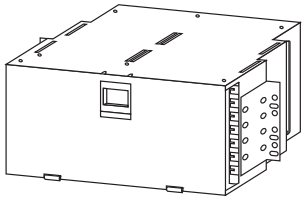

FVM-19X700

Ordering Information

Description	Dimensions (HxWxD)	Catalogue Number
Unloaded chassis for ADC KRONE 7" style frames 23" VCG included	7.0" x 19.0" or 23" x 12" (17.78 x 48.26 or 58.42 x 30.48cm)	FVM-19X700
Unloaded chassis for LGX 7" style frames with rear doors 23" VCG included	7.0" x 19.0" or 23" x 11.03" (17.78 x 48.26 or 58.42 x 28.02cm)	FVM-19X700X11
Unloaded chassis for ADC KRONE 7" style frames 19" VCG included	7.0" x 19.0" or 23" x 12" (17.78 x 48.26 or 58.42 x 30.48cm)	FVM-19X719
Unloaded chassis for LGX 7" style frames with rear doors 19" VCG included	7.0" x 19.0" or 23" x 11.03" (17.78 x 48.26 or 58.42 x 28.02cm)	FVM-19X719X11
Front vertical cable guides for 19" mounting environments		VCG-25
Front vertical cable guides for 23" mounting environments		VCG-45

5.25-Inch Chassis – 8 Single Plug-In Modules

The 5.25-inch VAM chassis was designed to fit into any 23-inch rack mounting environment. It can accommodate a maximum of eight plug-in modules, eight bulkhead plates, eight blank panels, or any combination thereof.

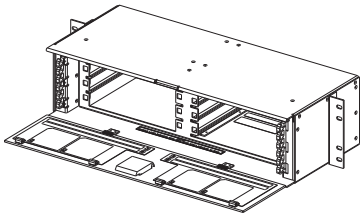

Ordering Information

Description	Dimensions (HxWxD)	Catalogue Number
Unloaded chassis 23" racks	5.25" x 23" x 12" (13.34 x 58.42 x 30.48cm)	FDM24-VAM525

Value-Added Module System

Splitter Module Introduction

ADC KRONE has developed Value-Added Modules equipped with optical splitters for a variety of applications. To address the emerging requirements of the broadcast video industry, optical splitters with custom split ratios are available. These modules can deliver a video signal to multiple subscribers. Also available are multiple configurations of optical splitters designed to monitor optical signals.

Splitter modules can be purchased with most industry standard singlemode and multimode connectors. Module inputs and outputs can be made via adapter, pigtail or bare fibre depending on customer requirements. These options are shown in the figure below. Various combinations of all front access to input/output ports or rear access to both input/output ports are also available. All bare fibre options utilise 2 mm jacketing.

The variety of module configurations allows the provider the opportunity to determine the number and type of optical connections necessary depending on whether a cross-connect or interconnect arrangement is used in the fibre cable management scheme.

VAM splitter modules requiring one, two or three mounting spaces may be used in the wall mount chassis; the larger 1 x 32, or 2 x 32 splitter modules require six mounting spaces.

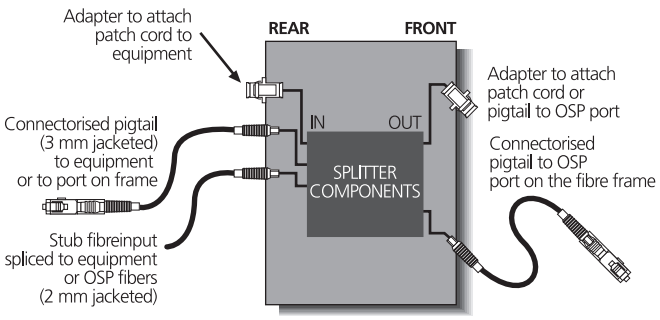

Splitter Module Application

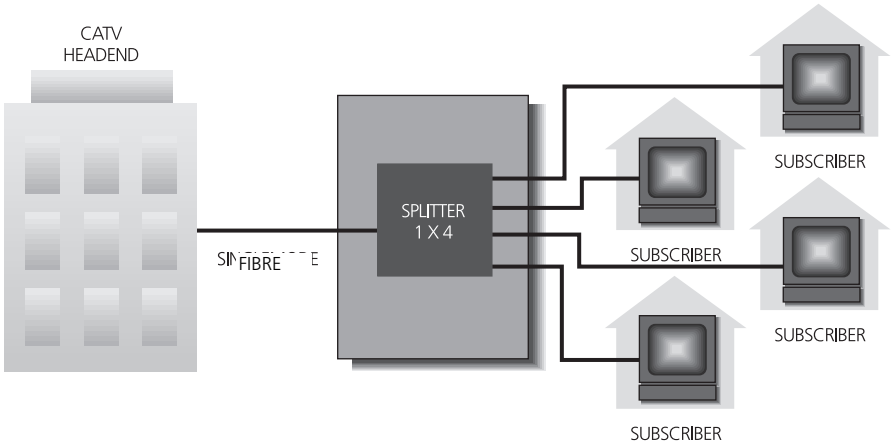

Utilising the splitter module, CATV companies can transport a signal from a headend to the far-end over one fibre before splitting the signal to feed multiple subscribers. The same concept can be used in the telephone industry.

Value-Added Module System

Singlemode Wideband Optical Splitter Specifications

Other splitter configurations are available.

Splitter Number	Splitter Type	Splitter Ratio	Maximum Insertion Loss*	Typical Insertion Loss*
2000	1x2	50/50	3.7/3.7	3.1/3.1
2100	1x2	55/45	3.2/4.1	2.7/3.6
2200	1x2	60/40	2.7/4.7	2.3/4.1
2300	1x2	65/35	2.3/5.3	2.0/4.7
2350	1x2	66.6./33.3	2.2/5.5	1.9/5.0
2400	1x2	70/30	2.0/6.0	1.7/5.4
2500	1x2	75/25	1.6/6.8	1.4/6.2
2600	1x2	80/20	1.3/7.8	1.1/7.1
2700	1x2	85/15	1.0/9.2	.8/8.4
2800	1x2	90/10	.8/11.2	.6/10.2
2900	1x2	95/5	.5/14.4	.4/13.2
2950	1x2	99/1	0.3/22.5	NA/NA
2030	2x2	50/50	3.7/3.7	3.1/3.1
3900	1x3	33/33/33	5.9/5.9/5.9	5.0/5.0/5.0
4900	1x4	25/25/25/25	7.4/7.4/7.4/7.4	6.2/6.2/6.2/6.2
5300	1x5	20/20/20/20/20	8.6/8.6/8.6/8.6/8.6	7.3/7.3/7.3/7.3/7.3
6000	1x6	16.6/16.6/ . . . 16.6	9.8/9.8/9.8/ . . ./9.8	8.1/8.1/8.1 . . . /8.1
7000	1x7	14.3/14.3/ . . . /14.3	10.6/10.6/ . . . /10.6	8.9/8.9/ . . . /8.9
8000	1x8	12.5/12.5/ . . .12.5	11.3/11.3/ . . . /11.3	9.5/9.5/ . . ./9.5
9000	1x9	11.1/11.1/ . . . /11.1	11.5/11.5/ . . . /11.5	9.9/9.9/ . . . /9.9
A110	1x10	10/10/10 . . . /10	12.1/12.1/ . . . /12.1	10.4/10.4/ . . . /10.4
B111	1x11	9.1/9.1/ . . . /9.1	13.1/13.1/ . . . /13.1	10.9/10.9/ . . . /10.9
C112	1x12	8.3/8.3/ . . . /8.3	13.3/13.3/ . . . /13.3	11.3/11.3/ . . . /11.3
D113	1x13	7.7/7.7/ . . . /7.7	13.8/13.8/ . . . /13.8	11.6/11.6/ . . . /11.6
E114	1x14	7.14/7.14/ . . . /7.14	13.8/13.8/ . . . /13.8	11.8/11.8/ . . . /11.8
F115	1x15	6.66/6.66/ . . . /6.66	14.5/14.5/ . . . /14.5	12.4/12.4/ . . . /12.4
G116	1x16	6.25/6.25/ . . . 6.25	14.9/14.9/ . . . 14.9	12.6/12.6/ . . . 12.6
M132	1x32	3.13/3.13/ . . . 3.13	18.5/18.5/ . . . 18/5	15.8/15.8/ . . . 15.8

Maximum Insertion Loss
Maximum insertion loss is the upper limit of insertion loss for the coupler and applies over the entire wavelength range specified in the bandpass.

Typical Insertion Loss
Typical insertion loss is the expected insertion loss value for the coupler measured at the specified center wavelength (i.e. 1310 nm and/or 1550 nm).

Value-Added Module System

Singlemode Optical Splitter Specifications

MATERIAL

Fibre:	Corning SMF-28
Jacket:	0.900mm hytrel tube
Housing:	Stainless steel tube

OPTICAL*

Bandpass	
Wavelength 1:	1260/1360 nm
Wavelength 2:	1430/1580 nm
Directivity:	55 dB minimum
Reflectance:	<-55 dB
Polarization Stability:	.5 dB maximum

MECHANICAL

Cable Retention:	.45kg (1.0 lb.) maximum for .25mm and .900mm fibre, 1kg (2.2 lbs.) maximum for cabled fibre assemblies
Flex:	300 cycles; .45kg (1.0 lb.) maximum load (fibre cable only)
Twist:	100 cycles; .45kg (1.0 lb.) maximum load (fibre cable only)
Vibration:	10-55 Hz per FOTP II condition I
Impact:	8 drops from 1.5 metres
Flammability:	All materials used in fabrication of coupler housing meet UL 94, Level V-I requirements

ENVIRONMENTAL

Humidity:	336 hours, 60°C at 95% relative humidity
Thermal Aging:	336 hours, 85°C
Temperature Cycling:	336 hours, -40°C to 85°C

Singlemode Optical Connector Specifications

	INSERTION LOSS (dB)	RETURN LOSS (dB)
Ultra Polish PC Connectors	0.3 dB maximum 0.1 dB typical	57 dB minimum
Angled Polish Connectors	0.5 dB maximum 0.1 dB typical	65 dB minimum

Value-Added Module System

Video Splitter Module Ordering Information

Catalogue Number

VSM- _ _ _ _ _ _ _ _ _ _ _ _ _ _ _ _ - _

VSM-	Standard VAM

Module Option

2	Input front, output front
3	Input front, output rear
4	Input rear, output rear
5	Input rear, output front

Input Connector/Adapter Singlemode

2U	FC ultra polish
2A	FC angled polish
4U	ST® ultra polish
7U	SC ultra polish
7A	SC angled polish
8A	E-2000 angled polish
00	Bare fibre
LA	LX.5 angled polish

OR

Multimode**

5F	ST® 50/125
5U	ST® 62.5/125
9A	SC 50/125
9B	SC 62.5/125
LM	LX.5® 62.5/125
00	Bare fibre
LN	LX.5 50/125
2M	FC 62.5/125
2N	FC 50/125

Split Ratio*

2000	1x2	50/50
2100	1x2	55/45
2200	1x2	60/40
2300	1x2	65/35
2350	1x2	66.6/33.3
2400	1x2	70/30
2500	1x2	75/25
2600	1x2	80/20
2700	1x2	85/15
2800	1x2	90/10
2900	1x2	95/5
2950	1x2	99/1
2030	2x2	50/50
3900	1x3	33/33/33
4900	1x4	25/25/25/25
5300	1x5	20/20/20/20/20
6000	1x6	16.6/16.6/16.6/ 16.6/16.6/16.6
7000	1x7	14.3/14.3/14.3/ 14.3/14.3/14.3/14/3
8000	1x8	12.5/12.5/...12.5
9000	1x9	11.1/11.1/11.1/...11.1
A110	1x10	10/10/10/...10
B111	1x11	9.1/9.1/9.1/...9.1
C112	1x12	8.33/8.33/8.33/...8.83
D113	1x13	7.7/7.7/7.7/...7.7
E114	1x14	7.14/7.14/7.14/...7.14
F115	1x15	6.66/6.66/6.66/...6.66
G116	1x16	6.25/6.25/6.25/...6.25
M132	1x32	3.125/3.125/3.125/...3.125

Output Connector/Adapter

2U	FC ultra polish
2A	FC angled polish
4U	ST® ultra polish
7U	SC ultra polish
7A	SC angled polish
8A	E-2000 angled polish
00	Bare fiber
LA	LX.5 angled polish

OR

Multimode**

5F	ST® 50/125
5U	ST® 62.5/125
9A	SC 50/125
9B	SC 62.5/125
LM	LX.5® 62.5/125
00	Bare fibre
LN	LX.5 50/125
2M	FC 62.5/125
2N	FC 50/125

Other Split Ratios are available.

Splitter Type

LEAVE BLANK	Wideband 1310 and 1550 nm
G	1310 nm wavelength flattened
J	1550 nm wavelength flattened

Output Pigtail Length† (in metres)
Example:
0 1 = 1 metre
1 0 = 10 metres

Input Pigtail Length† (in metres)
Example:
0 1 = 1 metre
1 0 = 10 metres

†Leave 00 for adapter option.

Number of Splitters

A	Single Splitter
B	Dual Splitter (2)
C	Triple Splitter (3)

See page 14-15 for module style

**Call ADC KRONE for multimode specifications and available split ratios.

2 Input Front, Output Front

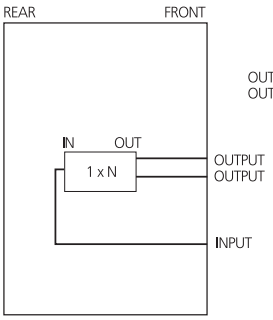

3 Input Front, Output Rear

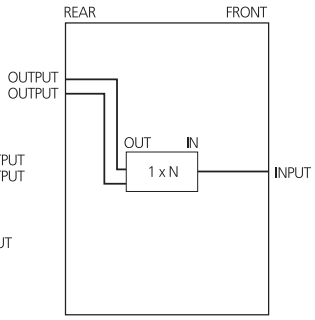

4 Input Rear, Output Rear

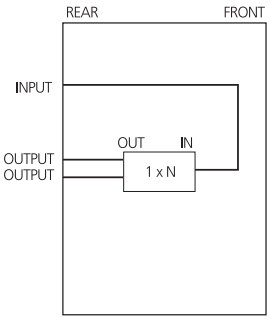

5 Mux Rear, Demux Front

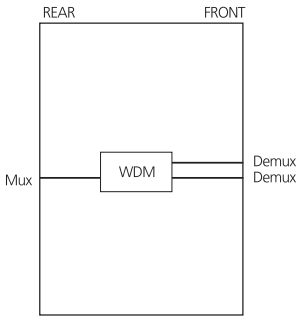

Value-Added Module System

WDM Module Introduction

ADC KRONE has developed Value-Added Modules equipped with Wavelength Division Multiplexers (WDMs) to address the emerging requirements of a number of applications.

WDM plug-in modules can be purchased with most industry standard singlemode connectors. Module inputs and outputs can be made via adapter, pigtail or bare fibre depending on customer requirements. These options are shown in the figure below. Various combinations of all front access to input/output ports or rear access to both input/output ports are also available. All bare fibre options utilize 2 mm jacketing.

The variety of module configurations allows the provider the opportunity to determine the number and type of optical connections necessary depending on whether a cross-connect or interconnect arrangement is used in the fibre cable management scheme.

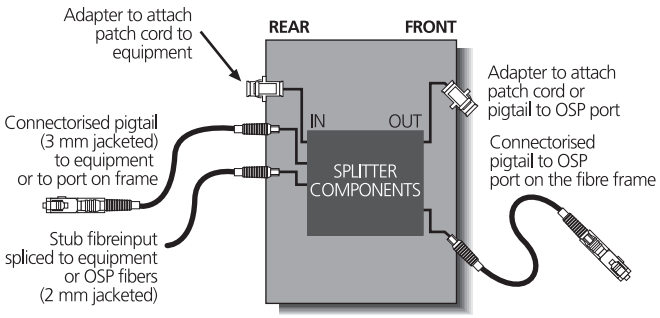

Wavelength Division Multiplexer (WDM) components are being deployed in optical networks to meet the requirements of numerous applications, including:

- Increasing transmission capacity over existing fibre lines
- Transmitting broadcast video signals over a voice signal
- Performing nonintrusive testing on fibre circuits

Value-Added Module System

WDM Module Applications

Increasing Transmission Capacity
This application was one of the first discovered for WDM devices. When all the fibre between two points in the network reaches full utilisation, additional capacity can be gained by deploying more fibre or by installing WDMs. The first choice is typically a very expensive proposition, involving high capital expenses. WDMs, however, can be integrated into the network to gain higher transmission capacity between two points without deploying additional fibre. By using WDMs in the network, a customer can independently transport optical signals at different wavelengths down the same fibres.

The original network shown at the right utilised two optical fibres, one for the transmit direction, the other for receive. The transmit and receive signal wavelength was 1310 nm. (The protect fibre pairs have been omitted for clarity.) In the higher capacity network, transmission signals at both 1310 nm and 1550 nm are simultaneously transmitted over the same fibres. This example shows unidirectional transmission; bidirectional WDMs are also available. By using WDMs, additional fibres were not required in the network.

Transmitting Broadcast Voice over Video
In this application, a 1310 nm fibre route has already been established to accommodate traditional voice grade service. When video requirements arise, a WDM network offers a cost-competitive option compared to additional fibre deployment. By using a 1550 nm video transmitter, both video and voice co-exist on the same fibre pairs, but are independently delivered to the customer.

Nonintrusive Testing
Continuous nonintrusive testing is frequently required for monitoring special fibre circuits as in a remote fibre test system. WDMs can be utilized in the network to send a continuous test signal on a fibre path at 1550 nm while standard payload transmission is simultaneously being transmitted at 1310 nm.

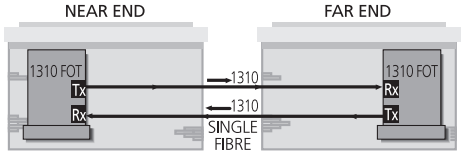

Original Network

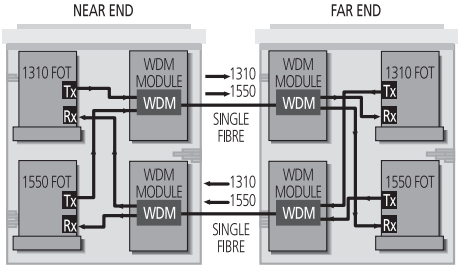

Higher Capacity Network with WDMs

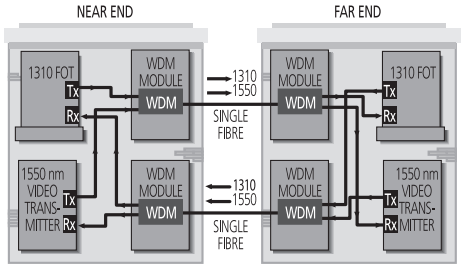

Video Over Voice Using WDMs

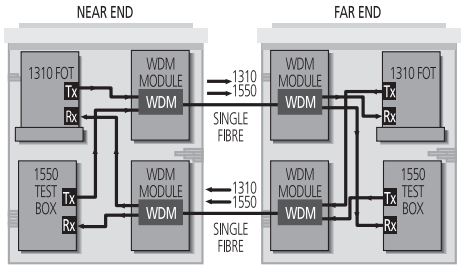

Continual Nonintrusive Testing

Value-Added Module System

Singlemode WDM Specifications

MATERIAL

Fibre:	Corning SMF-28
Jacket:	0.900 mm

OPTICAL

Uniformity:	1.0 Log2N (where N = number of channels)
Polarization Stability:	0.5 dB maximum
Bandpass	
1300 nm:	1290/1330 nm
1500 nm:	1530/1570 nm
Insertion Loss:	0.3 (standard isolation); 1.0 (very high isolation)
Reflectance:	<-55 dB
Isolation	
Near End:	55 dB
Far End:	15 dB (standard isolation); 30 dB (high isolation); 45 dB (very high isolation)

MECHANICAL

Cable Retention:	.45 kg (1.0 lb.) maximum for .250 mm and .900 mm fibre; 1.0 kg (2.2 lbs.) maximum for cabled fibre assemblies
Flex:	300 cycles; .45 kg (1.0 lb.) maximum load (fibre cable only)
Twist:	100 cycles; .45 kg (1.0 lb.) maximum load (fibre cable only)
Vibration:	10-55 Hz per FOTP II condition I
Impact:	8 drops from 1.5 metres
Flammability:	All materials used in fabrication of the coupler housing meet UL 94, Level V-I requirements

ENVIRONMENTAL

Humidity Resistance:	336 hours, 60°C at 95% relative humidity
Thermal Aging:	336 hours, 85°C
Temperature Cycling:	336 hours, -40°C to 85°C

1310/1550 nm

	MAXIMUM INSERTION LOSS* (dB)	MINIMUM ISOLATION (dB)
Multiplexer/Demultiplexer	0.3	15
High Isolation Demultiplexer	0.7	30
Very High Isolation Demultiplexer	1.0	45
Wavelength Filters	0.3	15

1533/1557 nm

	PASSBAND	MAXIMUM INSERTION LOSS* (dB)	MINIMUM ISOLATION (dB)
Unidirectional Multiplexer	1533 ±3 and 1557 ±3 nm	0.9	N/A
Very High Unidirectional Demultiplexer	1533 ±3 and 1557 ±3 nm	2.1	35
Very High Bidirectional Multiplexer/Demultiplexer	1533 ±3 and 1557 ±3 nm	2.1	35
Filter Passing 1533 nm	1533 ±3 nm	0.9	13
Filter Passing 1557 nm	1557 ±3 nm	0.9	13
High ISO Unidirectional Demuliplexer or Bidirectional Multiplexer/Demultiplexer	1533 ±3 and 1557 ±3 nm	1.8	20

* Maximum Insertion Loss does not include connector loss.

Value-Added Module System

WDM Module Ordering Information

Wavelength division multiplexers are mounted within modules in single or dual configurations. The connectors can be mounted on the front and rear, or on the front only.

Catalogue Number

WDM- _ _ _ _ _ _ _ _ _ _ _ _ _ _

	Standard VAM

uration

MUX front, DEMUX front
MUX front, DEMUX rear
MUX rear, DEMUX rear
MUX rear, DEMUX front

Module Configuration

A	Single
B	Dual
C	Triple

Isolation

1	Standard
2	High
3	Very High

Wavelength

A	1310 (λ_1)/1550 (λ_2)
B	1533 (λ_1)/1557 (λ_2)
C	1310/1533/1557
E	1550 (λ_1)/1625 (λ_2)
F	1310 (λ_1)/1625 (λ_2)

Demux Port Pigtail Length* (in metres)
Example:
0 1 = 1 m
1 0 = 10 m

Demux Port Connector/Adapter

2U	FC ultra polish
2A	FC angled polish
4U	ST® ultra polish
7U	SC ultra polish
7A	SC angled polish
8A	E-2000 angled polish
00	Bare fibre
LA	LX.5® angled polish

WDM Type (λ_1; λ_2)

A	Unidirectional multiplexer
C	Unidirectional demultiplexer
E	Bidirectional λ_1 Tx/λ_2 Rx
G	Bidirectional λ_1 Rx/λ_2 Tx
J	45 dB isolation, pass 1310
K	45 dB isolation, pass 1550
L	(Dual only) unidirectional multiplexer, unidirectional demultiplexer*
M	(Dual only) bidirectional λ_1 Tx/λ_2 Rx, bidirectional λ_2 Tx/λ_1 Rx

Mux Port Pigtail Length* (in metres)
Example:
0 1 = 1 m
1 0 = 10 m
*Leave 00 for Adapter Option

Mux Port Connector/Adapter

2U	FC ultra polish
2A	FC angled polish
4U	ST® ultra polish
7U	SC ultra polish
7A	SC angled polish
8A	E-2000 angled polish
00	Bare fibre
LA	LX.5® angled polish

* WDM Type "L" includes
(1) unidirectional multiplexer (standard isolation) and
(1) unidirectional demultiplexer (isolation specified by next character)

In the ordering charts, the abbreviation "mux" references the multiplexed side of the WDM, the side where two optical signals co-exist on one fibre. The abbreviation "demux" references the demultiplexed side of the WDM, the side where each signal appears on its own fibre. Both unidirectional and bidirectional WDMs are available as shown below.

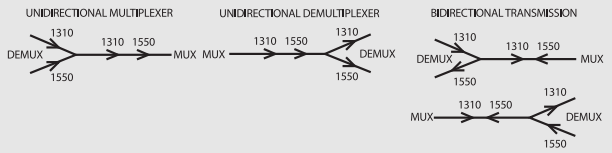

Value-Added Module System

WDM Module Style

2 Mux Front, Demux Front

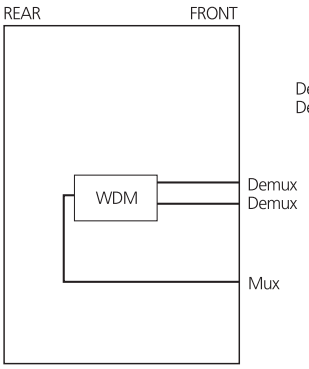

3 Mux Front, Demux Rear

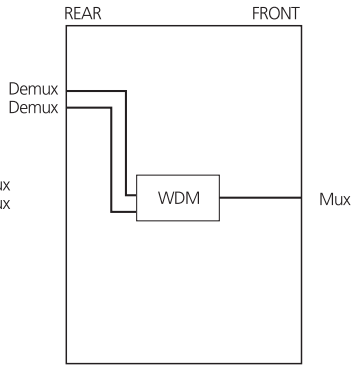

4 Mux Rear, Demux Rear

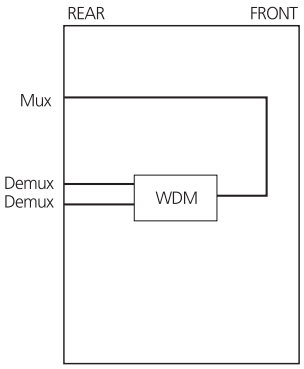

5 Mux Rear, Demux Front

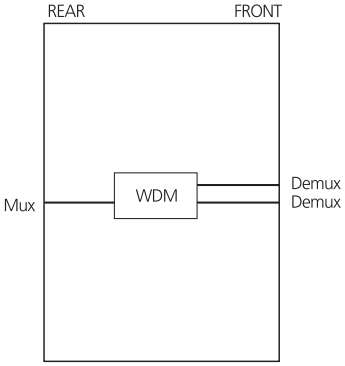

Value-Added Module System

Monitor Modules

Monitor modules eliminate the need to disconnect patch cords to test optical circuits by providing reliable, easy access. Couplers are mounted within the plug-in module to provide a nonintrusive monitoring point for testing. Each module is designed to meet specific customer requirements for access and monitor capabilities.

Customer Premises Module Applications

A customer premises module could be used as a *demarcation point* for customers requiring fibre feeds. Monitor ports located in the front of the module allow technicians access to both directions of the signal for testing without disrupting service to the customer.

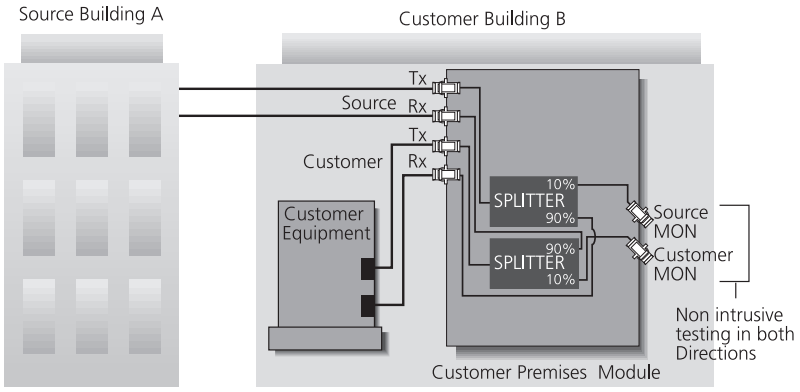

Installed at the customer premises location for troubleshooting fibre feeds without disrupting the service.

Dual Monitor Cross-Connect Module Applications

The dual monitor module offers an economical method of providing nonintrusive access to fibre circuits. Dual monitor modules are used in cross-connect configurations in which the outside plant cables are terminated to standard bulkhead adapters and fibre optic terminal equipment cables are terminated at the rear of the monitor module (see figure below). When the outside plant bulkhead terminations on the front are cross-connected to the fibre optic terminal monitor module, you have access to both the transmit and receive signals of the circuit for monitor capability.

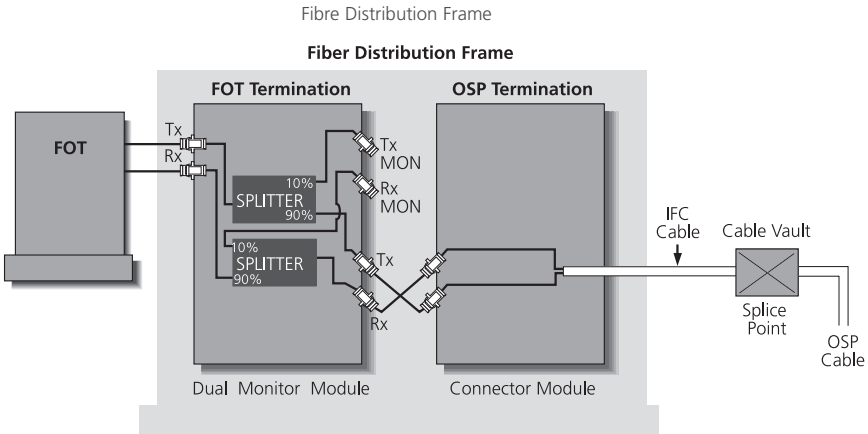

The OSP cable terminates on a standard connector module; FOT equipment terminates on the rear of the monitor module. Technicians connect the two by installing fibre patch cords between the connector module and the monitor module, completing the cross-connect.

Value-Added Module System

Monitor Module Ordering Information

Catalogue Number

VMM - _ _ _ _ _ _ _ _ _

Monitor Pigtail Length

Output Pigtail Length

Input Connector Type Singlemode

2U	FC ultra polish
2A	FC angled polish
4U	ST® ultra polish
7U	SC ultra polish
7A	SC angled polish
8A	E-2000 angled polish
LA	LX.5® angled polish

OR

Multimode**

SF	ST® 50/125
5U	ST® 62.5/125
9A	SC 50/125
9B	SC 62.5/125
LM	LX.5® 62.5/125
LN	LX.5® 50/125
2M	FC 62.5/125
2N	FC 50/125
00	Bare fiber

Output Connector Type Singlemode

2U	FC ultra polish
2A	FC angled polish
4U	ST® ultra polish
7U	SC ultra polish
7A	SC angled polish
8A	E-2000 angled polish
LA	LX.5® angled polish

OR

Multimode**

SF	ST® 50/125
5U	ST® 62.5/125
9A	SC 50/125
9B	SC 62.5/125
LM	LX.5® 62.5/125
LN	LX.5® 50/125
2M	FC 62.5/125
2N	FC 50/125
00	Bare fibre

Number of Circuits per VAM

1	1 circuit
2	2 circuits
3	3 circuits

Splitter Ratio*

A	90/10
B	95/05
C	50/50
E	80/20
F	75/25
H	70/30
J	60/40
K	99/01

Monitor Connector Type Singlemode

2U	FC ultra polish
2A	FC angled polish
4U	ST® ultra polish
7U	SC ultra polish
7A	SC angled polish
8A	E-2000 angled polish
LA	LX.5® angled polish

OR

Multimode**

SF	ST® 50/125
5U	ST® 62.5/125
9A	SC 50/125
9B	SC 62.5/125
LM	LX.5® 62.5/125
LN	LX.5® 50/125
2M	FC 62.5/125
2N	FC 50/125
00	Bare fibre

Input Pigtail Length Example (In Metre s):
01 = 1 m
10 = 10 m
000 = Adapters only on input, output and monitor ports

Module Style

D	Dual Monitor Cross-Connect
F	Single Monitor Cross-Connect with attenuation
G	Dual Monitor Cross-Connect
C	Customer Premises Monitor
J	Dual Monitor
B	Cross-Connect Customer Premises
P	Customer Premises
R	Single Monitor Cross-Connect
1	Dual Monitor Cross-Connect with attenuator

** Call ADC KRONE for multimode specifications and available split ratios.

Value-Added Module System

Module Style

C Customer Premises Monitor Module

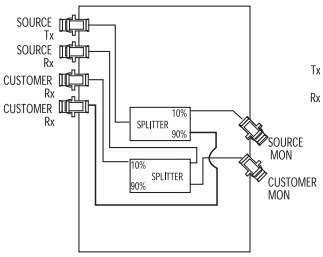

D Dual Monitor Cross-Connect

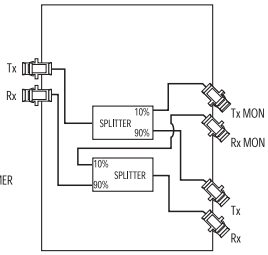

* F Insertion/Detection Cross-Connect

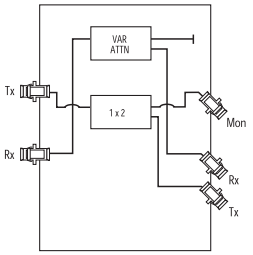

G Dual Monitor Cross-Connect

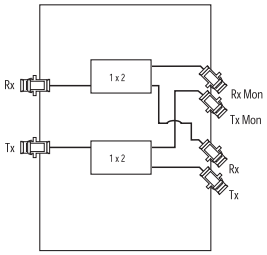

J Dual Monitor Cross-Connect

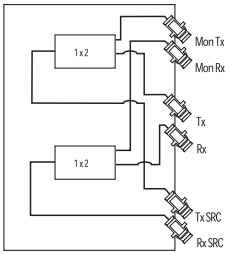

B Customer Premises Monitor Module

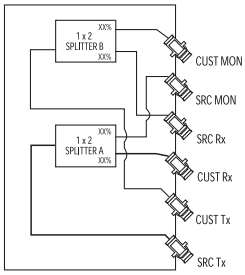

P Customer Premises Monitor Module

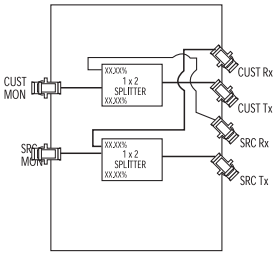

R Single Monitor Cross-Connect

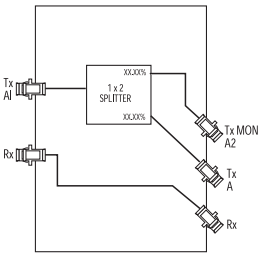

* 1 Dual Monitor Cross-Connect with Var. Attn.

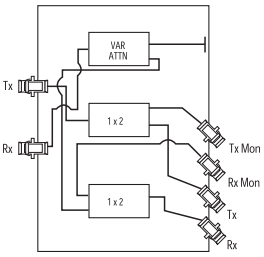

* Only available with standard monitor module VAMs

Value-Added Module System

Bulkhead Plates and Blanks

VAM-BLNK

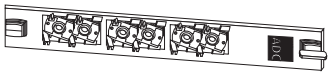

VAM-6PBX

Ordering Information

Description	Catalogue Number
Blank plate	VAM-BLNK
Six position bulkhead plates loaded with:	
Singlemode	
FC adapters	VAM-6PB2
FC angled polish adapters	VAM-A6PB2
ST® adapters	VAM-6PB4
SC adapters	VAM-6PB7
SC angled polish adapters	VAM-A6PB5
(3) duplex SC adapters	VAM-D6PB7
E-2000 angled polish APC adapters	VAM-A6PB8
Multimode	
ST® adapters	VAM-6PB5
SC adapters	VAM-6PB9
(3) duplex SC adapters	VAM-D6PB9